KL02 Sub-Family Reference Manual

Supports: MKL02Z8VFG4(R), MKL02Z16VFG4(R), MKL02Z32VFG4(R), MKL02Z16VFK4(R), MKL02Z32VFK4(R), MKL02Z16VFM4(R), and MKL02Z32VFM4(R)

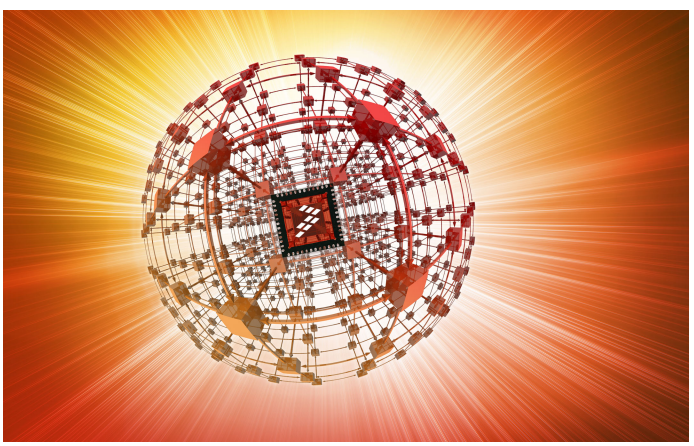

Document Number: KL02P32M48SF0RM
Rev 3.1, July 2013

Contents

Section number **Title** **Page**

Chapter 1
About This Document

1.1 Overview....25

1.1.1 Purpose....25

1.1.2 Audience....25

1.2 Conventions....25

1.2.1 Numbering systems....25

1.2.2 Typographic notation....26

1.2.3 Special terms....26

Chapter 2
Introduction

2.1 Overview....27

2.2 Kinetis L series....27

2.3 KL02 sub-family introduction....30

2.4 Module functional categories....31

2.4.1 ARM Cortex-M0+ core modules....31

2.4.2 System modules....32

2.4.3 Memories and memory interfaces....33

2.4.4 Clocks....33

2.4.5 Security and integrity modules....33

2.4.6 Analog modules....34

2.4.7 Timer modules....34

2.4.8 Communication interfaces....34

2.4.9 Human-machine interfaces....35

2.5 Orderable part numbers....35

Chapter 3
Chip Configuration

3.1 Introduction....37

Section number	Title	Page

3.2 Module to module interconnects....37

3.2.1 Interconnection overview....37

3.2.2 Analog reference options....38

3.3 Core modules....39

3.3.1 ARM Cortex-M0+ core configuration....39

3.3.2 Nested vectored interrupt controller (NVIC) configuration....42

3.3.3 Asynchronous wake-up interrupt controller (AWIC) configuration....45

3.4 System modules....46

3.4.1 SIM configuration....46

3.4.2 System mode controller (SMC) configuration....47

3.4.3 PMC configuration....48

3.4.4 MCM configuration....48

3.4.5 Crossbar-light switch configuration....49

3.4.6 Peripheral bridge configuration....51

3.4.7 Computer operating properly (COP) watchdog configuration....52

3.5 Clock modules....54

3.5.1 MCG configuration....54

3.5.2 OSC configuration....55

3.6 Memories and memory interfaces....56

3.6.1 Flash memory configuration....56

3.6.2 Flash memory controller configuration....58

3.6.3 SRAM configuration....59
3.7 Analog....61
3.7.1 12-bit SAR ADC configuration....61
3.7.2 CMP configuration....64
3.8 Timers....67
3.8.1 Timer/PWM module configuration....67
3.8.2 Low-power timer configuration....69
3.9 Communication interfaces....71
3.9.1 SPI configuration....71
3.9.2 I2C configuration....72
3.9.3 UART configuration....73
3.10 Human-machine interfaces (HMI)....74
3.10.1 GPIO configuration....74

Chapter 4
Memory Map

4.1 Introduction....77
4.2 System memory map....77
4.3 Flash memory map....78
4.3.1 Alternate non-volatile IRC user trim description....78
4.4 SRAM memory map....79
4.5 Bit Manipulation Engine....79
4.6 Peripheral bridge (AIPS-Lite) memory map....79
4.6.1 Read-after-write sequence and required serialization of memory operations....80
4.6.2 Peripheral bridge (AIPS-Lite) memory map....80
4.6.3 Modules restricted access in user mode....84
4.7 Private Peripheral Bus (PPB) memory map....84

Chapter 5
Clock Distribution

5.1 Introduction....85

5.2 Programming model....85
5.3 High-level device clocking diagram....85
5.4 Clock definitions....86
5.4.1 Device clock summary....87
5.5 Internal clocking requirements....88
5.5.1 Clock divider values after reset....89
5.5.2 VLPR mode clocking....89
5.6 Clock gating....90
5.7 Module clocks....90
5.7.1 PMC 1-kHz LPO clock....91
5.7.2 COP clocking....91
5.7.3 LPTMR clocking....92
5.7.4 TPM clocking....92
5.7.5 UART clocking....93

Chapter 6
Reset and Boot

6.1 Introduction....95
6.2 Reset....95
6.2.1 Power-on reset (POR)....95
6.2.2 System reset sources....96
6.2.3 MCU resets....99
6.2.4 RESET_b pin....100
6.2.5 Debug resets....100
6.3 Boot....101
6.3.1 Boot sources....101
6.3.2 FOPT boot options....101
6.3.3 Boot sequence....103

Chapter 7
Power Management

7.1 Introduction....105
7.2 Clocking modes....105
7.2.1 Partial Stop....105
7.2.2 Compute Operation....106
7.2.3 Peripheral Doze....107
7.2.4 Clock gating....107
7.3 Power modes....108
7.4 Entering and exiting power modes....109
7.5 Module operation in low-power modes....110

Chapter 8
Security

8.1 Introduction....113
8.2 Flash security....113
8.3 Security interactions with other modules....113
8.3.1 Security interactions with Debug....114

Chapter 9
Debug

9.1 Introduction....115
9.2 Debug port pin descriptions....115
9.3 SWD status and control registers....116
9.3.1 MDM-AP Control Register....117
9.3.2 MDM-AP Status Register....118
9.4 Debug resets....120
9.5 Micro Trace Buffer (MTB)....120
9.6 Debug in low-power modes....121
9.7 Debug and security....122

Chapter 10
Signal Multiplexing and Signal Descriptions

10.1 Introduction....123
10.2 Signal multiplexing integration....123
10.2.1 Port control and interrupt module features....124
10.2.2 Clock gating....125
10.2.3 Signal multiplexing constraints....125
10.3 Pinout....125
10.3.1 KL02 signal multiplexing and pin assignments....125
10.3.2 KL02 pinouts....126
10.4 Module Signal Description Tables....129
10.4.1 Core modules....129
10.4.2 System modules....130
10.4.3 Clock modules....130
10.4.4 Memories and memory interfaces....130
10.4.5 Analog....130
10.4.6 Timer Modules....131
10.4.7 Communication interfaces....131
10.4.8 Human-machine interfaces (HMI)....132

Chapter 11
Port Control and Interrupts (PORT)

11.1 Introduction....133
11.2 Overview....133
11.2.1 Features....133
11.2.2 Modes of operation....134
11.3 External signal description....134
11.4 Detailed signal description....135
11.5 Memory map and register definition....135
11.5.1 Pin Control Register n (PORT*x*_PCR*n*)....138

11.5.2 Global Pin Control Low Register (PORT*x*_GPCLR)....140

11.5.3 Global Pin Control High Register (PORT*x*_GPCHR)....141

11.5.4 Interrupt Status Flag Register (PORT*x*_ISFR)....141

11.6 Functional description....142

11.6.1 Pin control....142

11.6.2 Global pin control....143

11.6.3 External interrupts....143

Chapter 12
System Integration Module (SIM)

12.1 Introduction....145

12.1.1 Features....145

12.2 Memory map and register definition....145

12.2.1 System Options Register 2 (SIM_SOPT2)....146

12.2.2 System Options Register 4 (SIM_SOPT4)....147

12.2.3 System Options Register 5 (SIM_SOPT5)....149

12.2.4 System Options Register 7 (SIM_SOPT7)....150

12.2.5 System Device Identification Register (SIM_SDID)....151

12.2.6 System Clock Gating Control Register 4 (SIM_SCGC4)....153

12.2.7 System Clock Gating Control Register 5 (SIM_SCGC5)....155

12.2.8 System Clock Gating Control Register 6 (SIM_SCGC6)....156

12.2.9 System Clock Divider Register 1 (SIM_CLKDIV1)....157

12.2.10 Flash Configuration Register 1 (SIM_FCFG1)....159

12.2.11 Flash Configuration Register 2 (SIM_FCFG2)....160

12.2.12 Unique Identification Register Mid-High (SIM_UIDMH)....161

12.2.13 Unique Identification Register Mid Low (SIM_UIDML)....161

12.2.14 Unique Identification Register Low (SIM_UIDL)....162

12.2.15 COP Control Register (SIM_COPC)....162

12.2.16 Service COP Register (SIM_SRVCOP)....163

12.3 Functional description....164

Chapter 13
System Mode Controller (SMC)

13.1 Introduction....165
13.2 Modes of operation....165
13.3 Memory map and register descriptions....167
13.3.1 Power Mode Protection register (SMC_PMPROT)....167
13.3.2 Power Mode Control register (SMC_PMCTRL)....169
13.3.3 Stop Control Register (SMC_STOPCTRL)....170
13.3.4 Power Mode Status register (SMC_PMSTAT)....171
13.4 Functional description....172
13.4.1 Power mode transitions....172
13.4.2 Power mode entry/exit sequencing....175
13.4.3 Run modes....177
13.4.4 Wait modes....178
13.4.5 Stop modes....179
13.4.6 Debug in low power modes....181

Chapter 14
Power Management Controller (PMC)

14.1 Introduction....183
14.2 Features....183
14.3 Low-voltage detect (LVD) system....183
14.3.1 LVD reset operation....184
14.3.2 LVD interrupt operation....184
14.3.3 Low-voltage warning (LVW) interrupt operation....184
14.4 I/O retention....185
14.5 Memory map and register descriptions....185
14.5.1 Low Voltage Detect Status And Control 1 register (PMC_LVDSC1)....186
14.5.2 Low Voltage Detect Status And Control 2 register (PMC_LVDSC2)....187
14.5.3 Regulator Status And Control register (PMC_REGSC)....188

Chapter 15
Reset Control Module (RCM)

15.1 Introduction....191

15.2 Reset memory map and register descriptions....191

15.2.1 System Reset Status Register 0 (RCM_SRS0)....191

15.2.2 System Reset Status Register 1 (RCM_SRS1)....193

15.2.3 Reset Pin Filter Control register (RCM_RPFC)....194

15.2.4 Reset Pin Filter Width register (RCM_RPFW)....195

Chapter 16
Bit Manipulation Engine (BME)

16.1 Introduction....197

16.1.1 Overview....198

16.1.2 Features....198

16.1.3 Modes of operation....199

16.2 External signal description....199

16.3 Memory map and register definition....200

16.4 Functional description....200

16.4.1 BME decorated stores....200

16.4.2 BME decorated loads....207

16.4.3 Additional details on decorated addresses and GPIO accesses....213

16.5 Application information....214

Chapter 17
Miscellaneous Control Module (MCM)

17.1 Introduction....217

17.1.1 Features....217

17.2 Memory map/register descriptions....217

17.2.1 Crossbar Switch (AXBS) Slave Configuration (MCM_PLASC)....218

17.2.2 Crossbar Switch (AXBS) Master Configuration (MCM_PLAMC)....219

17.2.3 Platform Control Register (MCM_PLACR)....219

17.2.4 Compute Operation Control Register (MCM_CPO)....222

Chapter 18
Micro Trace Buffer (MTB)

18.1 Introduction....225
18.1.1 Overview....225
18.1.2 Features....228
18.1.3 Modes of operation....229
18.2 External signal description....229
18.3 Memory map and register definition....230
18.3.1 MTB_RAM Memory Map....230
18.3.2 MTB_DWT Memory Map....242
18.3.3 System ROM Memory Map....253

Chapter 19
Crossbar Switch Lite (AXBS-Lite)

19.1 Introduction....259
19.1.1 Features....259
19.2 Memory Map / Register Definition....259
19.3 Functional Description....260
19.3.1 General operation....260
19.3.2 Arbitration....261
19.4 Initialization/application information....262

Chapter 20
Peripheral Bridge (AIPS-Lite)

20.1 Introduction....263
20.1.1 Features....263
20.1.2 General operation....263
20.2 Functional description....264
20.2.1 Access support....264

Chapter 21
Multipurpose Clock Generator (MCG)

21.1 Introduction....265

21.1.1 Features....265

21.1.2 Modes of Operation....268

21.2 External Signal Description....268

21.3 Memory Map/Register Definition....268

21.3.1 MCG Control 1 Register (MCG_C1)....268

21.3.2 MCG Control 2 Register (MCG_C2)....269

21.3.3 MCG Control 3 Register (MCG_C3)....271

21.3.4 MCG Control 4 Register (MCG_C4)....271

21.3.5 MCG Control 6 Register (MCG_C6)....273

21.3.6 MCG Status Register (MCG_S)....273

21.3.7 MCG Status and Control Register (MCG_SC)....274

21.3.8 MCG Auto Trim Compare Value High Register (MCG_ATCVH)....276

21.3.9 MCG Auto Trim Compare Value Low Register (MCG_ATCVL)....276

21.4 Functional Description....276

21.4.1 MCG mode state diagram....276

21.4.2 Low Power Bit Usage....280

21.4.3 MCG Internal Reference Clocks....280

21.4.4 External Reference Clock....281

21.4.5 MCG Fixed frequency clock....281

21.4.6 MCG Auto TRIM (ATM)....281

21.5 Initialization / Application information....283

21.5.1 MCG module initialization sequence....283

21.5.2 Using a 32.768 kHz reference....285

21.5.3 MCG mode switching....286

Chapter 22
Oscillator (OSC)

22.1 Introduction....289
22.2 Features and Modes....289
22.3 Block Diagram....290
22.4 OSC Signal Descriptions....290
22.5 External Crystal / Resonator Connections....291
22.6 External Clock Connections....292
22.7 Memory Map/Register Definitions....293
22.7.1 OSC Memory Map/Register Definition....293
22.8 Functional Description....294
22.8.1 OSC Module States....294
22.8.2 OSC Module Modes....296
22.8.3 Counter....297
22.8.4 Reference Clock Pin Requirements....297
22.9 Reset....298
22.10 Low Power Modes Operation....298
22.11 Interrupts....298

Chapter 23
Flash Memory Controller (FMC)

23.1 Introduction....299
23.1.1 Overview....299
23.1.2 Features....299
23.2 Modes of operation....300
23.3 External signal description....300
23.4 Memory map and register descriptions....300
23.5 Functional description....300

Chapter 24
Flash Memory Module (FTFA)

24.1 Introduction....303
24.1.1 Features....304
24.1.2 Block Diagram....304
24.1.3 Glossary....305
24.2 External Signal Description....306
24.3 Memory Map and Registers....306
24.3.1 Flash Configuration Field Description....306
24.3.2 Program Flash IFR Map....307
24.3.3 Register Descriptions....308
24.4 Functional Description....317
24.4.1 Flash Protection....317
24.4.2 Interrupts....317
24.4.3 Flash Operation in Low-Power Modes....318
24.4.4 Functional Modes of Operation....319
24.4.5 Flash Reads and Ignored Writes....319
24.4.6 Read While Write (RWW)....319
24.4.7 Flash Program and Erase....319
24.4.8 Flash Command Operations....319
24.4.9 Margin Read Commands....324
24.4.10 Flash Command Description....325
24.4.11 Security....338
24.4.12 Reset Sequence....340

Chapter 25
Analog-to-Digital Converter (ADC)

25.1 Introduction....341
25.1.1 Features....341
25.1.2 Block diagram....342

Section number	Title	Page

25.2 ADC signal descriptions....343

25.2.1 Analog Power (VDDA)....344

25.2.2 Analog Ground (VSSA)....344

25.2.3 Analog Channel Inputs (ADx)....344

25.3 Memory map and register definitions....344

25.3.1 ADC Status and Control Registers 1 (ADC*x*_SC1*n*)....345

25.3.2 ADC Configuration Register 1 (ADC*x*_CFG1)....349

25.3.3 ADC Configuration Register 2 (ADC*x*_CFG2)....350

25.3.4 ADC Data Result Register (ADC*x*_R*n*)....351

25.3.5 Compare Value Registers (ADC*x*_CV*n*)....352

25.3.6 Status and Control Register 2 (ADC*x*_SC2)....353

25.3.7 Status and Control Register 3 (ADC*x*_SC3)....355

25.3.8 ADC Offset Correction Register (ADC*x*_OFS)....357

25.3.9 ADC Plus-Side Gain Register (ADC*x*_PG)....357

25.3.10 ADC Plus-Side General Calibration Value Register (ADC*x*_CLPD)....358

25.3.11 ADC Plus-Side General Calibration Value Register (ADC*x*_CLPS)....358

25.3.12 ADC Plus-Side General Calibration Value Register (ADC*x*_CLP4)....359

25.3.13 ADC Plus-Side General Calibration Value Register (ADC*x*_CLP3)....359

25.3.14 ADC Plus-Side General Calibration Value Register (ADC*x*_CLP2)....360

25.3.15 ADC Plus-Side General Calibration Value Register (ADC*x*_CLP1)....360

25.3.16 ADC Plus-Side General Calibration Value Register (ADC*x*_CLP0)....361

25.4 Functional description....361

25.4.1 Clock select and divide control....362

25.4.2 Voltage reference selection....362

25.4.3 Hardware trigger and channel selects....363

25.4.4 Conversion control....364

25.4.5 Automatic compare function....370

25.4.6 Calibration function....372

25.4.7 User-defined offset function....373

25.4.8 Temperature sensor....374
25.4.9 MCU wait mode operation....375
25.4.10 MCU Normal Stop mode operation....375
25.4.11 MCU Low-Power Stop mode operation....376
25.5 Initialization information....377
25.5.1 ADC module initialization example....377
25.6 Application information....379
25.6.1 External pins and routing....379
25.6.2 Sources of error....381

Chapter 26
Comparator (CMP)

26.1 Introduction....385
26.2 CMP features....385
26.3 6-bit DAC key features....386
26.4 ANMUX key features....386
26.5 CMP, DAC and ANMUX diagram....387
26.6 CMP block diagram....388
26.7 Memory map/register definitions....389
26.7.1 CMP Control Register 0 (CMP*x*_CR0)....389
26.7.2 CMP Control Register 1 (CMP*x*_CR1)....390
26.7.3 CMP Filter Period Register (CMP*x*_FPR)....392
26.7.4 CMP Status and Control Register (CMP*x*_SCR)....392
26.7.5 DAC Control Register (CMP*x*_DACCR)....393
26.7.6 MUX Control Register (CMP*x*_MUXCR)....394
26.8 Functional description....395
26.8.1 CMP functional modes....395
26.8.2 Power modes....404
26.8.3 Startup and operation....405

26.8.4 Low-pass filter....405

26.9 CMP interrupts....408

26.10 Digital-to-analog converter....408

26.11 DAC functional description....409

26.11.1 Voltage reference source select....409

26.12 DAC resets....409

26.13 DAC clocks....409

26.14 DAC interrupts....410

26.15 CMP Trigger Mode....410

Chapter 27
Timer/PWM Module (TPM)

27.1 Introduction....411

27.1.1 TPM Philosophy....411

27.1.2 Features....411

27.1.3 Modes of Operation....412

27.1.4 Block Diagram....412

27.2 TPM Signal Descriptions....413

27.2.1 TPM_EXTCLK — TPM External Clock....413

27.2.2 TPM_CHn — TPM Channel (n) I/O Pin....414

27.3 Memory Map and Register Definition....414

27.3.1 Status and Control (TPM*x*_SC)....415

27.3.2 Counter (TPM*x*_CNT)....416

27.3.3 Modulo (TPM*x*_MOD)....417

27.3.4 Channel (n) Status and Control (TPM*x*_C*n*SC)....418

27.3.5 Channel (n) Value (TPM*x*_C*n*V)....419

27.3.6 Capture and Compare Status (TPM*x*_STATUS)....420

27.3.7 Configuration (TPM*x*_CONF)....422

27.4 Functional Description....423

27.4.1 Clock Domains....424

27.4.2 Prescaler....424

27.4.3 Counter....425

27.4.4 Input Capture Mode....427

27.4.5 Output Compare Mode....428

27.4.6 Edge-Aligned PWM (EPWM) Mode....429

27.4.7 Center-Aligned PWM (CPWM) Mode....431

27.4.8 Registers Updated from Write Buffers....433

27.4.9 Reset Overview....433

27.4.10 TPM Interrupts....434

Chapter 28
Low-Power Timer (LPTMR)

28.1 Introduction....435

28.1.1 Features....435

28.1.2 Modes of operation....435

28.2 LPTMR signal descriptions....436

28.2.1 Detailed signal descriptions....436

28.3 Memory map and register definition....436

28.3.1 Low Power Timer Control Status Register (LPTMR*x*_CSR)....437

28.3.2 Low Power Timer Prescale Register (LPTMR*x*_PSR)....438

28.3.3 Low Power Timer Compare Register (LPTMR*x*_CMR)....440

28.3.4 Low Power Timer Counter Register (LPTMR*x*_CNR)....440

28.4 Functional description....441

28.4.1 LPTMR power and reset....441

28.4.2 LPTMR clocking....441

28.4.3 LPTMR prescaler/glitch filter....441

28.4.4 LPTMR compare....443

28.4.5 LPTMR counter....443

28.4.6 LPTMR hardware trigger....444

28.4.7 LPTMR interrupt....444

Chapter 29
Serial Peripheral Interface (SPI)

29.1 Introduction....445

29.1.1 Features....445

29.1.2 Modes of operation....446

29.1.3 Block diagrams....446

29.2 External signal description....449

29.2.1 SPSCK — SPI Serial Clock....449

29.2.2 MOSI — Master Data Out, Slave Data In....449

29.2.3 MISO — Master Data In, Slave Data Out....449

29.2.4 SS — Slave Select....449

29.3 Memory Map and Register Descriptions....450

29.3.1 SPI Control Register 1 (SPI*x*_C1)....450

29.3.2 SPI Control Register 2 (SPI*x*_C2)....452

29.3.3 SPI Baud Rate Register (SPI*x*_BR)....453

29.3.4 SPI Status Register (SPI*x*_S)....454

29.3.5 SPI Data Register (SPI*x*_D)....455

29.3.6 SPI Match Register (SPI*x*_M)....456

29.4 Functional description....457

29.4.1 General....457

29.4.2 Master mode....457

29.4.3 Slave mode....459

29.4.4 SPI clock formats....460

29.4.5 SPI baud rate generation....463

29.4.6 Special features....463
29.4.7 Error conditions....465
29.4.8 Low-power mode options....466
29.4.9 Reset....467
29.4.10 Interrupts....468
29.5 Initialization/application information....469
29.5.1 Initialization sequence....469
29.5.2 Pseudo-Code Example....470

Chapter 30
Inter-Integrated Circuit (I2C)

30.1 Introduction....473
30.1.1 Features....473
30.1.2 Modes of operation....474
30.1.3 Block diagram....474
30.2 I2C signal descriptions....475
30.3 Memory map and register descriptions....475
30.3.1 I2C Address Register 1 (I2C*x*_A1)....476
30.3.2 I2C Frequency Divider register (I2C*x*_F)....477
30.3.3 I2C Control Register 1 (I2C*x*_C1)....478
30.3.4 I2C Status register (I2C*x*_S)....479
30.3.5 I2C Data I/O register (I2C*x*_D)....481
30.3.6 I2C Control Register 2 (I2C*x*_C2)....481
30.3.7 I2C Programmable Input Glitch Filter register (I2C*x*_FLT)....482
30.3.8 I2C Range Address register (I2C*x*_RA)....484
30.4 Functional description....484
30.4.1 I2C protocol....484
30.4.2 10-bit address....489
30.4.3 Address matching....491
30.4.4 Resets....491

30.4.5 Interrupts....492
30.4.6 Programmable input glitch filter....493
30.4.7 Address matching wakeup....494
30.5 Initialization/application information....494

Chapter 31
Universal Asynchronous Receiver/Transmitter (UART0)

31.1 Introduction....497
31.1.1 Features....497
31.1.2 Modes of operation....498
31.1.3 Block diagram....498
31.2 Register definition....500
31.2.1 UART Baud Rate Register High (UART*x*_BDH)....501
31.2.2 UART Baud Rate Register Low (UART*x*_BDL)....502
31.2.3 UART Control Register 1 (UART*x*_C1)....502
31.2.4 UART Control Register 2 (UART*x*_C2)....504
31.2.5 UART Status Register 1 (UART*x*_S1)....505
31.2.6 UART Status Register 2 (UART*x*_S2)....507
31.2.7 UART Control Register 3 (UART*x*_C3)....509
31.2.8 UART Data Register (UART*x*_D)....510
31.2.9 UART Match Address Registers 1 (UART*x*_MA1)....511
31.2.10 UART Match Address Registers 2 (UART*x*_MA2)....512
31.2.11 UART Control Register 4 (UART*x*_C4)....512
31.2.12 UART Control Register 5 (UART*x*_C5)....513
31.3 Functional description....514
31.3.1 Baud rate generation....514
31.3.2 Transmitter functional description....514
31.3.3 Receiver functional description....516
31.3.4 Additional UART functions....519
31.3.5 Interrupts and status flags....521

Chapter 32
General-Purpose Input/Output (GPIO)

32.1 Introduction....523

32.1.1 Features....523

32.1.2 Modes of operation....523

32.1.3 GPIO signal descriptions....524

32.2 Memory map and register definition....525

32.2.1 Port Data Output Register (GPIO*x*_PDOR)....526

32.2.2 Port Set Output Register (GPIO*x*_PSOR)....526

32.2.3 Port Clear Output Register (GPIO*x*_PCOR)....527

32.2.4 Port Toggle Output Register (GPIO*x*_PTOR)....527

32.2.5 Port Data Input Register (GPIO*x*_PDIR)....528

32.2.6 Port Data Direction Register (GPIO*x*_PDDR)....528

32.3 FGPIO memory map and register definition....529

32.3.1 Port Data Output Register (FGPIO*x*_PDOR)....530

32.3.2 Port Set Output Register (FGPIO*x*_PSOR)....530

32.3.3 Port Clear Output Register (FGPIO*x*_PCOR)....531

32.3.4 Port Toggle Output Register (FGPIO*x*_PTOR)....531

32.3.5 Port Data Input Register (FGPIO*x*_PDIR)....532

32.3.6 Port Data Direction Register (FGPIO*x*_PDDR)....532

32.4 Functional description....532

32.4.1 General-purpose input....532

32.4.2 General-purpose output....533

32.4.3 IOPORT....533

Chapter 1
About This Document

1.1 Overview

1.1.1 Purpose

This document describes the features, architecture, and programming model of the Freescale KL02 microcontroller.

1.1.2 Audience

A reference manual is primarily for system architects and software application developers who are using or considering using a Freescale product in a system.

1.2 Conventions

1.2.1 Numbering systems

The following suffixes identify different numbering systems:

This suffix	Identifies a
b	Binary number. For example, the binary equivalent of the number 5 is written 101b. In some cases, binary numbers are shown with the prefix *0b*.
d	Decimal number. Decimal numbers are followed by this suffix only when the possibility of confusion exists. In general, decimal numbers are shown without a suffix.
h	Hexadecimal number. For example, the hexadecimal equivalent of the number 60 is written 3Ch. In some cases, hexadecimal numbers are shown with the prefix *0x*.

1.2.2 Typographic notation

The following typographic notation is used throughout this document:

Example	Description
placeholder, x	Items in italics are placeholders for information that you provide. Italicized text is also used for the titles of publications and for emphasis. Plain lowercase letters are also used as placeholders for single letters and numbers.
`code`	Fixed-width type indicates text that must be typed exactly as shown. It is used for instruction mnemonics, directives, symbols, subcommands, parameters, and operators. Fixed-width type is also used for example code. Instruction mnemonics and directives in text and tables are shown in all caps; for example, BSR.
SR[SCM]	A mnemonic in brackets represents a named field in a register. This example refers to the Scaling Mode (SCM) field in the Status Register (SR).
REVNO[6:4], XAD[7:0]	Numbers in brackets and separated by a colon represent either: • A subset of a register's named field For example, REVNO[6:4] refers to bits 6–4 that are part of the COREREV field that occupies bits 6–0 of the REVNO register. • A continuous range of individual signals of a bus For example, XAD[7:0] refers to signals 7–0 of the XAD bus.

1.2.3 Special terms

The following terms have special meanings:

Term	Meaning
asserted	Refers to the state of a signal as follows: • An active-high signal is asserted when high (1). • An active-low signal is asserted when low (0).
deasserted	Refers to the state of a signal as follows: • An active-high signal is deasserted when low (0). • An active-low signal is deasserted when high (1). In some cases, deasserted signals are described as *negated*.
reserved	Refers to a memory space, register, or field that is either reserved for future use or for which, when written to, the module or chip behavior is unpredictable.

Chapter 2
Introduction

2.1 Overview

This chapter provides an overview of the Kinetis L series of ARM® Cortex®-M0+ MCUs and KL02 product family. It also presents high-level descriptions of the modules available on the devices covered by this document.

2.2 Kinetis L series

The Kinetis L series is the most scalable portfolio of ultra low-power, mixed-signal ARM® Cortex®-M0+ MCUs in the industry. The portfolio includes five MCU families that offer a broad range of memory, peripheral and package options. Kinetis L Series families share common peripherals and pin-counts allowing developers to migrate easily within an MCU family or between MCU families to take advantage of more memory or feature integration. This scalability allows developers to standardize on the Kinetis L Series for their end product platforms, maximising hardware and software reuse and reducing time-to-market.

Features common to all Kinetis L series families include:

- 48 MHz ARM Cortex-M0+ core
- High-speed 12/16-bit analog-to-digital converters
- 12-bit digital-to-analog converters for all series except for KLx4/KLx2 family
- High-speed analog comparators
- Low-power touch sensing with wake-up on touch from reduced power states for all series except for KLx4/KLx2 family
- Powerful timers for a broad range of applications including motor control
- Low-power focused serial communication interfaces such as low-power UART, SPI, I2C, and others.
- Single power supply: 1.71–3.6 V with multiple low-power modes support single operation temperature:

- –40 ~ 105 °C (exclude WLCSP package)

Kinetis L series MCU families combine the latest low-power innovations with precision mixed-signal capability and a broad range of communication, connectivity, and human-machine interface peripherals. Each MCU family is supported by a market-leading enablement bundle from Freescale and numerous ARM third party ecosystem partners. The KL0x family is the entry-point to the Kinetis L series and is pin-compatible with the 8-bit S08PT family. The KL1x/2x/3x/4x families are compatible with each other and their equivalent ARM Cortex-M4 Kinetis K series families—K10/20/30/40.

The following figure depicts key features, memory and package options for Kinetis L series family of MCUs.

Family	Program Flash	Packages	Key Features
KL4x Family	128-256KB	64-121pin	
KL3x Family	64-256KB	64-121pin	
KL2x Family	32-256KB	32-121pin	
KL1x Family	32-256KB	32-80pin	
KL0x Family	8-32KB	16-48pin	

Figure 2-1. Kinetis L series families of MCU portfolio

All Kinetis L series families include a powerful array of analog, communication and timing and control peripherals with the level of feature integration increasing with flash memory size and the pin count. Features within the Kinetis L series families include:

- Core and architecture:
  - ARM Cortex-M0+ Core running up to 48 MHz with zero wait state execution from memories
    - Single-cycle access to I/O: Up to 50 percent faster than standard I/O, improves reaction time to external events allowing bit banging and software protocol emulation

        - Two-stage pipeline: Reduced number of cycles per instruction (CPI), enabling faster branch instruction and ISR entry, and reducing power consumption
        - Excellent code density as compared to 8-bit and 16-bit MCUs: Reduces flash size, system, cost and power consumption
        - Optimized access to program memory: Accesses on alternate cycles reduces power consumption.
        - 100 percent compatible with ARM Cortex-M0 and a subset ARM Cortex-M3/M4: Reuse existing compilers and debug tools.
        - Simplified architecture: 56 instructions and 17 registers enable easy programming and efficient packaging of 8/16/32-bit data in memory.
        - Linear 4 GB address space removes the need for paging/banking, reducing software complexity.
        - ARM third-party ecosystem support: Software and tools to help minimize development time/cost
    - Micro Trace Buffer: Lightweight trace solution allows fast bug identification and correction.
    - Bit Manipulation Engine (BME): BME reduces code size and cycles for bit-oriented operations to peripheral registers eliminating traditional methods where the core would need to perform read-modify-write operations.
    - Up to 4-channel DMA for peripheral and memory servicing with minimal CPU intervention (feature not available on KL02 family)
- Ultra low-power:
    - Extreme dynamic efficiency: 32-bit ARM Cortex-M0+ core combined with Freescale 90 nm thin-film storage flash technology delivers 50% energy savings per Coremark in comparison to the closest 8/16-bit competitive solution.
    - Multiple flexible low-power modes, including new operation clocking option which reduces dynamic power by shutting off bus and system clocks for lowest power core processing. Peripherals with an alternate asynchronous clock source can continue operation.
    - UART, SPI, I2C, ADC, DAC, TPM, LPT, and DMA support low-power mode operation without waking up the core.
- Memory:
    - Scalable memory footprints from 8 KB flash / 1 KB SRAM to 256 KB flash / 32 KB SRAM
    - Embedded 64 B cache memory for optimizing bus bandwidth and flash execution performance (32 B cache on KL02 family)
- Mixed-signal analog:

  - Fast, high-precision 16-, or 12-bit ADC with optional differential pairs, 12-bit DAC, high-speed comparators.
  - Powerful signal conditioning, conversion, and analysis capability with reduced system cost (12-bit DAC not available on KL02 family)
- Human Machine Interface (HMI):
  - Optional capacitive Touch Sensing Interface with full low-power support and minimal current adder when enabled
  - Segment LCD controller
- Connectivity and communications:
  - Up to three UARTs:
    - All UARTs support DMA transfers, and can trigger when data on bus is detected;
    - UART0 supports 4x to 32x over sampling ratio;
    - Asynchronous transmit and receive operation for operating in STOP/VLPS modes.
  - Up to two SPIs
  - Up to two I^2Cs
  - Full-speed USB OTG controller with on-chip transceiver
  - 5–3.3 V USB on-chip regulator
  - Up to one I^2S
- Reliability, safety, and security:
  - Internal watchdog with independent clock source
- Timing and control:
  - Powerful timer modules which support general-purpose, PWM, and motor control functions
  - Periodic Interrupt Timer for RTOS task scheduler time base or trigger source for ADC conversion and timer modules
- System:
  - GPIO with pin interrupt functionality
  - Wide operating voltage range from 1.71 V to 3.6 V with flash programmable down to 1.71 V with fully functional flash and analog peripherals
  - Ambient operating temperature ranges from –40 °C to 105 °C

2.3 KL02 sub-family introduction

The device is highly-integrated, market leading ultra low-power 32-bit microcontroller based on the enhanced Cortex-M0+ (CM0+) core platform. The features of the KL0x family derivatives are as follows.

- Core platform clock up to 48 MHz, bus clock up to 24 MHz
- Wide operating voltage ranges from 1.71–3.6 V with fully functional flash program/erase/read operations

- Multiple package options from 16-pin to 32-pin
- Ambient operating temperature ranges from –40 °C to 105 °C.

The family acts as an ultra low-power, cost-effective microcontroller to provide developers an appropriate entry-level 32-bit solution. The family is the next-generation MCU solution for low-cost, low-power, high-performance devices applications. It's valuable for cost-sensitive, portable applications requiring long battery life-time.

2.4 Module functional categories

The modules on this device are grouped into functional categories. The following sections describe the modules assigned to each category in more detail.

Table 2-1. Module functional categories

Module category	Description
ARM Cortex-M0+ core	• 32-bit MCU core from ARM's Cortex-M class, 1.77 CoreMark®/MHz from single-cycle access memories, 48 MHz CPU frequency
System	• System integration module • Power management and mode controllers • Multiple power modes available based on run, wait, stop, and power-down modes • Miscellaneous control module • Peripheral bridge • COP watchdog

Memories	• Internal memories include:
	  • Up to 32 KB flash memory
	  • Up to 4 KB SRAM

Clocks	• Multiple clock generation options available from internally- and externally-generated clocks
	  • MCG module with FLL for systems and CPU clock sources
	  • Low power 1 kHz RC oscillator for COP watchdog
	• System oscillator to provide clock source for the MCU

Security	• COP watchdog timer (COP)
Analog	• 12-bit analog-to-digital converters • Comparator (CMP) with internal 6-bit digital-to-analog converter (DAC)
Timers	• Two 2-channel TPMs • Low-power timer • System tick timer
Communications	• One8-bit serial peripheral interface • Two inter-integrated circuit (I^2C) modules • One low power UART module
Human-Machine Interfaces (HMI)	• General purpose input/output controller

2.4.1 ARM Cortex-M0+ core modules

The following core modules are available on this device.

Table 2-2. Core modules

Module	Description
ARM Cortex-M0+	The ARM Cortex-M0+ is the newest member of the Cortex M Series of processors targeting microcontroller applications focused on very cost sensitive, deterministic, interrupt driven environments. The Cortex M0+ processor is based on the ARMv6 Architecture and Thumb®-2 ISA and is 100% instruction set compatible with its predecessor, the Cortex-M0 core, and upward compatible to Cortex-M3 and M4 cores.
NVIC	The ARMv6-M exception model and nested-vectored interrupt controller (NVIC) implement a relocatable vector table supporting many external interrupts, a single non-maskable interrupt (NMI), and priority levels. The NVIC replaces shadow registers with equivalent system and simplified programmability. The NVIC contains the address of the function to execute for a particular handler. The address is fetched via the instruction port allowing parallel register stacking and look-up. The first sixteen entries are allocated to ARM internal sources with the others mapping to MCU-defined interrupts.
AWIC	The primary function of the Asynchronous Wake-up Interrupt Controller (AWIC) is to detect asynchronous wake-up events in stop modes and signal to clock control logic to resume system clocking. After clock restart, the NVIC observes the pending interrupt and performs the normal interrupt or event processing.
Single-cycle I/O Port	For high-speed, single-cycle access to peripherals, the Cortex-M0+ processor implements a dedicated single-cycle I/O port.
Debug interfaces	Most of this device's debug is based on the ARM CoreSight™ architecture. One debug interface is supported: • Serial Wire Debug (SWD)

2.4.2 System modules

The following system modules are available on this device.

Table 2-3. System modules

Module	Description
System integration module (SIM)	The SIM includes integration logic and several module configuration settings.
System mode controller (SMC)	The SMC provides control and protection on entry and exit to each power mode, control for the power management controller (PMC), and reset entry and exit for the complete MCU.
Power management controller (PMC)	The PMC provides the user with multiple power options. Multiple modes are supported that allow the user to optimize power consumption for the level of functionality needed. Includes power-on-reset (POR) and integrated low voltage detect (LVD) with reset (brownout) capability and selectable LVD trip points.
Miscellaneous control module (MCM)	The MCM includes integration logic and details.

Table continues on the next page...

Table 2-3. System modules (continued)

Module	Description
Crossbar switch lite (AXBS-Lite)	The AXBS connects bus masters and bus slaves, allowing all bus masters to access different bus slaves simultaneously and providing arbitration among the bus masters when they access the same slave.
Peripheral bridge (AIPS-Lite)	The peripheral bridge converts the crossbar switch interface to an interface to access a majority of peripherals on the device.
Computer operating properly watchdog (WDOG)	The WDOG monitors internal system operation and forces a reset in case of failure. It can run from an independent 1 kHz low power oscillator with a programmable refresh window to detect deviations in program flow or system frequency.

2.4.3 Memories and memory interfaces

The following memories and memory interfaces are available on this device.

Table 2-4. Memories and memory interfaces

Module	Description
Flash memory	Program flash memory — up to 32 KB of the non-volatile flash memory that can execute program code
Flash memory controller	Manages the interface between the device and the on-chip flash memory.
SRAM	Up to 4 KB internal system RAM.

2.4.4 Clocks

The following clock modules are available on this device.

Table 2-5. Clock modules

Module	Description
Multipurpose Clock Generator (MCG)	MCG module containing a frequency-locked-loop (FLL) controlled by internal or external reference oscillator.
System oscillator (OSC)	The system oscillator, in conjunction with an external crystal or resonator, generates a reference clock for the MCU.

2.4.5 Security and integrity modules

The following security and integrity modules are available on this device:

Table 2-6. Security and integrity modules

Module	Description
Watchdog timer (WDOG)	Watchdog timer keeps a watch on the system functioning and resets it in case of its failure.

2.4.6 Analog modules

The following analog modules are available on this device:

Table 2-7. Analog modules

Module	Description
Analog-to-digital converters (ADC)	12-bit successive-approximation ADC module.
Analog comparators	One comparator that compares two analog input voltages across the full range of the supply voltage and can trigger an ADC acquisition, TPM update, or CPU interrupt.
6-bit digital-to-analog converters (DAC)	64-tap resistor ladder network which provides a selectable voltage reference for comparator.

2.4.7 Timer modules

The following timer modules are available on this device:

Table 2-8. Timer modules

Module	Description
Timer/PWM module (TPM)	• Selectable TPM clock mode • Prescaler divide-by 1, 2, 4, 8, 16, 32, 64, or 128 • 16-bit free-running counter or modulo counter with counting be up or up-down • Two configurable channels for input capture, output compare, or edge-aligned PWM mode • Support the generation of an interrupt per channel • Support the generation of an interrupt when the counter overflows • Support selectable trigger input to optionally reset or cause the counter to start incrementing. • Support the generation of hardware triggers when the counter overflows and per channel
Low power timer (LPTMR)	• 16-bit time counter or pulse counter with compare • Configurable clock source for prescaler/glitch filter • Configurable input source for pulse counter

2.4.8 Communication interfaces

The following communication interfaces are available on this device:

Table 2-9. Communication modules

Module	Description
Serial peripheral interface (SPI)	Synchronous serial bus for communication to an external device
Inter-integrated circuit (I2C)	Allows communication between a number of devices. Also supports the System Management Bus (SMBus) Specification, version 2.
Universal asynchronous receiver/ transmitters (UART)	One low power UART module that retains functional in stop modes.

2.4.9 Human-machine interfaces

The following human-machine interfaces (HMI) are available on this device:

Table 2-10. HMI modules

Module	Description
General purpose input/output (GPIO)	Some general purpose input or output (GPIO) pins are capable of interrupt request generation.

2.5 Orderable part numbers

The following table summarizes the part numbers of the devices covered by this document.

Table 2-11. Orderable part numbers summary

Freescale part number	CPU frequency	Pin count	Package	Total flash memory	RAM	Temperature range
MKL02Z8VFG4(R)	48 MHz	16	QFN	8 KB	1 KB	-40 to 105 °C
MKL02Z16VFG4(R)	48 MHz	16	QFN	16 KB	2 KB	-40 to 105 °C
MKL02Z32VFG4(R)	48 MHz	16	QFN	32 KB	4 KB	-40 to 105 °C
MKL02Z16VFK4(R)	48 MHz	24	QFN	16 KB	2 KB	-40 to 105 °C
MKL02Z32VFK4(R)	48 MHz	24	QFN	32 KB	4 KB	-40 to 105 °C
MKL02Z16VFM4(R)	48 MHz	32	QFN	16 KB	2 KB	-40 to 105 °C
MKL02Z32VFM4(R)	48 MHz	32	QFN	32 KB	4 KB	-40 to 105 °C

Chapter 3
Chip Configuration

3.1 Introduction

This chapter provides details on the individual modules of the microcontroller. It includes:

- Module block diagrams showing immediate connections within the device
- Specific module-to-module interactions not necessarily discussed in the individual module chapters
- Links for more information

3.2 Module to module interconnects

3.2.1 Interconnection overview

The following table captures the module to module interconnections for this device.

Table 3-1. Module-to-module interconnects

Peripheral	Signal	—	to Peripheral	Use Case	Control	Comment
TPM1	CH0F, CH1F	to	ADC (Trigger)	ADC Triggering (A AND B)	SOPT7_ADCALTTRGEN = 0	Ch0 is A, and Ch1 is B, selecting this ADC trigger is for supporting A and B triggering. In Stop and VLPS modes, the second trigger must be set to >10 µs after the first trigger
LPTMR	Hardware trigger	to	ADC (Trigger)	ADC Triggering (A or B)	SOPT7_ADC0TRGSEL (4-bit field), ADC0PRETRGSEL to select A or B	—

Table continues on the next page...

Table 3-1. Module-to-module interconnects (continued)

Peripheral	Signal	—	to Peripheral	Use Case	Control	Comment
TPMx	TOF	to	ADC (Trigger)	ADC Triggering (A or B)	SOPT7_ADC0TRGSEL (4-bit field), SOPT7_ADC0PRETRGSEL to select A or B	—
EXTRG_IN	EXTRG_IN	to	ADC (Trigger)	ADC Triggering (A or B)	SOPT7_ADC0TRGSEL (4-bit field) ADC0PRETRGSEL to select A or B	—
CMP0	CMP0_OUT	to	ADC (Trigger)	ADC Triggering (Aor B)	SOPT7_ADC0TRGSEL (4-bit field) ADC0PRETRGSEL to select A or B	—
CMP0	CMP0_OUT	to	LPTMR_ALT0	Count CMP events	LPTMR_CSR[TPS]	—
CMP0	CMP0_OUT	to	TPM1 CH0	Input capture	SOPT4_TPM1CH0SRC	—
CMP0	CMP0_OUT	to	UART0_RX	IR interface	SOPT5_UART0RXSRC	—
LPTMR	Hardware trigger	to	CMPx	Low power triggering of the comparator	CMP_CR1[TRIGM]	—
LPTMR	Hardware trigger	to	TPMx	TPM Trigger input	TPMx_CONF[TRGSEL] (4 bit field)	—
TPMx	TOF	to	TPMx	TPM Trigger input	TPMx_CONF[TRGSEL] (4-bit field)	—
TPM1	Timebase	to	TPMx	TPM Global timebase input	TPMx_CONF[GTBEEN]	—
EXTRG_IN	EXTRG_IN	to	TPMx	TPM Trigger input	TPMx_CONF[TRGSEL] (4-bit field)	—
CMP0	CMP0_OUT	to	TPMx	TPM Trigger input	TPMx_CONF[TRGSEL] (4-bit field)	—
UART0	UART0_TX	to	Modulated by TPM1 CH0	UART modulation	SOPT5_UART0TXSRC	—

3.2.2 Analog reference options

Several analog blocks have selectable reference voltages as shown in Table 3-2. These options allow analog peripherals to share or have separate analog references. Care should be taken when selecting analog references to avoid cross talk noise.

Table 3-2. Analog reference options

Module	Reference option	Comment/ Reference selection
12-bit SAR ADC	1 - VREFH 2 - VDDA 3 - Reserved	Selected by ADCx_SC2[REFSEL]
CMP with 6-bit DAC	Vin1 - VREFH Vin2 - VDD[1]	Selected by CMPx_DACCR[VRSEL]

1. Use this option for the best ADC operation.

3.3 Core modules

3.3.1 ARM Cortex-M0+ core configuration

This section summarizes how the module has been configured in the chip. Full documentation for this module is provided by ARM and can be found at **arm.com**.

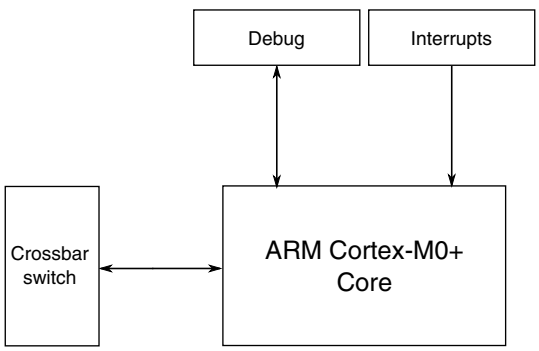

Figure 3-1. Core configuration

Table 3-3. Reference links to related information

Topic	Related module	Reference
Full description	ARM Cortex-M0+ core, r0p0	ARM Cortex-M0+ Technical Reference Manual, r0p0
System memory map		System memory map
Clocking		Clock distribution

Table continues on the next page...

Table 3-3. Reference links to related information (continued)

Topic	Related module	Reference
Power management		Power management
System/instruction/data bus module	Crossbar switch	Crossbar switch
Debug	Serial wire debug (SWD)	Debug
Interrupts	Nested vectored interrupt controller (NVIC)	NVIC
	Miscellaneous control module (MCM)	MCM

3.3.1.1 ARM Cortex M0+ core

The ARM Cortex M0+ parameter settings are as follows:

Table 3-4. ARM Cortex-M0+ parameter settings

Parameter	Verilog name	Value	Description
Arch Clock Gating	ACG	1 = Present	Implements architectural clock gating
DAP Slave Port Support	AHBSLV	1	Supports any AHB debug access port (like the CM4 DAP)
DAP ROM Table Base	BASEADDR	0xF000_2003	Base address for DAP ROM table
Endianess	BE	0	Little endian control for data transfers
Breakpoints	BKPT	2	Implements 2 breakpoints
Debug Support	DBG	1 = Present	—
Halt Event Support	HALTEV	1 = Present	—
I/O Port	IOP	1 = Present	Implements single-cycle ld/st accesses to special address space
IRQ Mask Enable	IRQDIS	0x00000000	Assume (for now) all 32 IRQs are used (set if IRQ is disabled)
Debug Port Protocol	JTAGnSW	0 = SWD	SWD protocol, not JTAG
Core Memory Protection	MPU	0 = Absent	No MPU
Number of IRQs	NUMIRQ	32	Assume full NVIC request vector
Reset all registers	RAR	0 = Standard	Do not force all registers to be async reset
Multiplier	SMUL	0 = Fast Mul	Implements single-cycle multiplier
Multi-drop Support	SWMD	0 = Absent	Do not include serial wire support for multi-drop
System Tick Timer	SYST	1 = Present	Implements system tick timer (for CM4 compatibility)
DAP Target ID	TARGETID	0	—
User/Privileged	USER	1 = Present	Implements processor operating modes

Table continues on the next page...

Table 3-4. ARM Cortex-M0+ parameter settings (continued)

Parameter	Verilog name	Value	Description
Vector Table Offset Register	VTOR	1 = Present	Implements relocation of exception vector table
WIC Support	WIC	1 = Present	Implements WIC interface
WIC Requests	WICLINES	34	Exact number of wake-up IRQs is 34
Watchpoints	WPT	2	Implements two watchpoints

For details on the ARM Cortex-M0+ processor core, see the ARM website:**arm.com**.

3.3.1.2 Buses, interconnects, and interfaces

The ARM Cortex-M0+ core has two bus interfaces:

- Single 32-bit AMBA-3 AHB-Lite system interface that provides connections to peripherals and all system memory, which includes flash memory and RAM
- Single 32-bit I/O port bus interfacing to the GPIO with 1-cycle loads and stores

3.3.1.3 System tick timer

The CLKSOURCE field in SysTick Control and Status register selects either the core clock (when CLKSOURCE = 1) or a divide-by-16 of the core clock (when CLKSOURCE = 0). Because the timing reference is a variable frequency, the TENMS field in the SysTick Calibration Value Register is always 0.

3.3.1.4 Debug facilities

This device supports standard ARM 2-pin SWD debug port.

3.3.1.5 Core privilege levels

The core on this device is implemented with both privileged and unprivileged levels. The ARM documentation uses different terms than this document to distinguish between privilege levels.

If you see this term...	it also means this term...
Privileged	Supervisor
Unprivileged or user	User

3.3.2 Nested vectored interrupt controller (NVIC) configuration

This section summarizes how the module has been configured in the chip. Full documentation for this module is provided by ARM and can be found at **arm.com**.

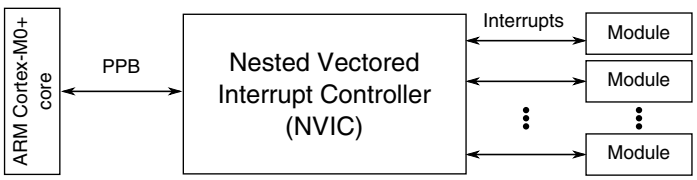

Figure 3-2. NVIC configuration

Table 3-5. Reference links to related information

Topic	Related module	Reference
Full description	Nested vectored interrupt controller (NVIC)	ARM Cortex-M0+ Technical Reference Manual
System memory map	—	System memory map
Clocking	—	Clock distribution
Power management	—	Power management
Private peripheral bus (PPB)	ARM Cortex-M0+ core	ARM Cortex-M0+ core

3.3.2.1 Interrupt priority levels

This device supports four priority levels for interrupts. Therefore, in the NVIC, each source in the IPR registers contains two bits. For example, IPR0 is shown below:

	31	30	29	28	27	26	25	24	23	22	21	20	19	18	17	16	15	14	13	12	11	10	9	8	7	6	5	4	3	2	1	0
R	IRQ3		0	0	0	0	0	0	IRQ2		0	0	0	0	0	0	IRQ1		0	0	0	0	0	0	IRQ0		0	0	0	0	0	0
W																																

3.3.2.2 Non-maskable interrupt

The non-maskable interrupt request to the NVIC is controlled by the external $\overline{\text{NMI}}$ signal. The pin the $\overline{\text{NMI}}$ signal is multiplexed on, must be configured for the $\overline{\text{NMI}}$ function to generate the non-maskable interrupt request.

3.3.2.3 Interrupt channel assignments

The interrupt vector assignments are defined in the following table.

- Vector number — the value stored on the stack when an interrupt is serviced.
- IRQ number — non-core interrupt source count, which is the vector number minus 16.

The IRQ number is used within ARM's NVIC documentation.

NOTE

The NVIC wake-up sources in the following table support only down to VLPS.

Table 3-7. Interrupt vector assignments

Address	Vector	IRQ[1]	NVIC IPR register number[2]	Source module	Source description
ARM core system handler vectors					
0x0000_0000	0	—	—	ARM core	Initial stack pointer
0x0000_0004	1	—	—	ARM core	Initial program counter
0x0000_0008	2	—	—	ARM core	Non-maskable interrupt (NMI)
0x0000_000C	3	—	—	ARM core	Hard fault
0x0000_0010	4	—	—	—	—
0x0000_0014	5	—	—	—	—
0x0000_0018	6	—	—	—	—
0x0000_001C	7	—	—	—	—
0x0000_0020	8	—	—	—	—
0x0000_0024	9	—	—	—	—
0x0000_0028	10	—	—	—	—
0x0000_002C	11	—	—	ARM core	Supervisor call (SVCall)
0x0000_0030	12	—	—	—	—
0x0000_0034	13	—	—	—	—
0x0000_0038	14	—	—	ARM core	Pendable request for system service (PendableSrvReq)
0x0000_003C	15	—	—	ARM core	System tick timer (SysTick)
Non-Core Vectors					
0x0000_0040	16	0	0	—	—
0x0000_0044	17	1	0	—	—
0x0000_0048	18	2	0	—	—
0x0000_004C	19	3	0	—	—
0x0000_0050	20	4	1	—	—

Table continues on the next page...

Table 3-7. Interrupt vector assignments (continued)

Address	Vector	IRQ[1]	NVIC IPR register number[2]	Source module	Source description
0x0000_0054	21	5	1	FTFA	Command complete and read collision
0x0000_0058	22	6	1	PMC	Low-voltage detect, low-voltage warning
0x0000_005C	23	7	1	—	—
0x0000_0060	24	8	2	I^2C0	—
0x0000_0064	25	9	2	I^2C1	—
0x0000_0068	26	10	2	SPI0	Single interrupt vector for all sources
0x0000_006C	27	11	2	—	—
0x0000_0070	28	12	3	UART0	Status and error
0x0000_0074	29	13	3	—	—
0x0000_0078	30	14	3	—	—
0x0000_007C	31	15	3	ADC0	—
0x0000_0080	32	16	4	CMP0	—
0x0000_0084	33	17	4	TPM0	—
0x0000_0088	34	18	4	TPM1	—
0x0000_008C	35	19	4	—	—
0x0000_0090	36	20	5	—	—
0x0000_0094	37	21	5	—	—
0x0000_0098	38	22	5	—	—
0x0000_009C	39	23	5	—	—
0x0000_00A0	40	24	6	—	—
0x0000_00A4	41	25	6	—	—
0x0000_00A8	42	26	6	—	—
0x0000_00AC	43	27	6	MCG	—
0x0000_00B0	44	28	7	LPTMR0	—
0x0000_00B4	45	29	7	—	—
0x0000_00B8	46	30	7	Port control module	Pin detect (Port A)
0x0000_00BC	47	31	7	Port control module	Pin detect (Port B)

1. Indicates the NVIC's interrupt source number.
2. Indicates the NVIC's IPR register number used for this IRQ. The equation to calculate this value is: IRQ div 4

3.3.2.3.1 Determining the bitfield and register location for configuring a particular interrupt

Suppose you need to configure the SPI0 interrupt. The following table is an excerpt of the SPI0 row from Interrupt priority levels.

Table 3-8. Interrupt vector assignments

Address	Vector	IRQ[1]	NVIC IPR register number[2]	Source module	Source description
0x0000_0068	26	10	2	SPI0	Single interrupt vector for all sources

1. Indicates the NVIC's interrupt source number.
2. Indicates the NVIC's IPR register number used for this IRQ. The equation to calculate this value is: IRQ div 4.

- The NVIC registers you would use to configure the interrupt are:
  - NVICIPR2
- To determine the particular IRQ's field location within these particular registers:
  - NVICIPR2 field starting location = 8 * (IRQ mod 4) + 6 = 22

  Since the NVICIPR fields are 2-bit wide (4 priority levels), the NVICIPR2 field range is 22–23.

Therefore, the following field locations are used to configure the SPI0 interrupts:
- NVICIPR2[23:22]

3.3.3 Asynchronous wake-up interrupt controller (AWIC) configuration

This section summarizes how the module has been configured in the chip. Full documentation for this module is provided by ARM and can be found at **arm.com**.

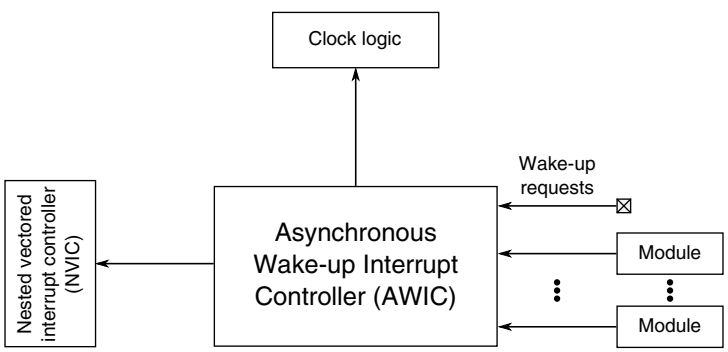

Figure 3-3. Asynchronous wake-up interrupt controller configuration

Table 3-9. Reference links to related information

Topic	Related module	Reference
System memory map	—	System memory map
Clocking	—	Clock distribution
Power management	—	Power management

Table continues on the next page...

Table 3-9. Reference links to related information (continued)

Topic	Related module	Reference
	Nested vectored interrupt controller (NVIC)	NVIC
Wake-up requests	—	AWIC wake-up sources

3.3.3.1 Wake-up sources

The device uses the following internal and external inputs to the AWIC module.

Table 3-10. AWIC stop wake-up sources

Wake-up source	Description
Available system resets	$\overline{\text{RESET_b}}$ pin when LPO is its clock source
Low-voltage detect	Power management controller—functional in Stop mode
Low-voltage warning	Power management controller—functional in Stop mode
Pin interrupts	Port control module—any enabled pin interrupt is capable of waking the system.
ADC	The ADC is functional when using internal clock source.
CMP0	Interrupt in normal or trigger mode
I^2Cx	Address match wakeup
UART0	Any interrupt provided clock remains enabled.
NMI	$\overline{\text{NMI_b}}$ pin
TPMx	Any interrupt provided clock remains enabled.
LPTMR	Any interrupt provided clock remains enabled.
SPI	Slave mode interrupt

3.4 System modules

3.4.1 SIM configuration

This section summarizes how the module has been configured in the chip. For a comprehensive description of the module itself, see the module's dedicated chapter.

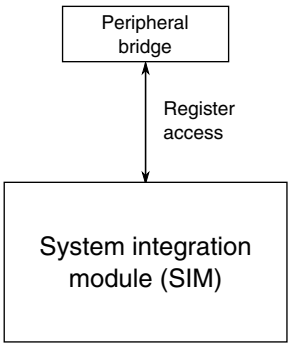

Figure 3-4. SIM configuration

Table 3-11. Reference links to related information

Topic	Related module	Reference
Full description	SIM	SIM
System memory map	—	System memory map
Clocking	—	Clock distribution
Power management	—	Power management

3.4.2 System mode controller (SMC) configuration

This section summarizes how the module has been configured in the chip. For a comprehensive description of the module itself, see the module's dedicated chapter.

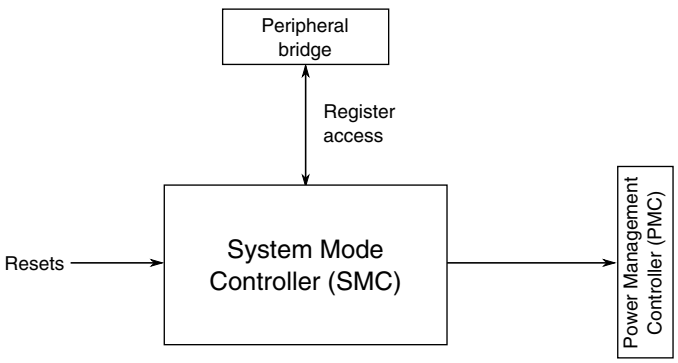

Figure 3-5. System mode controller configuration

Table 3-12. Reference links to related information

Topic	Related module	Reference
Full description	System mode controller (SMC)	SMC
System memory map	—	System memory map
Power management	—	Power management

Table continues on the next page...

Table 3-12. Reference links to related information (continued)

Topic	Related module	Reference
—	Power management controller (PMC)	PMC
—	Reset control module (RCM)	Reset

3.4.2.1 VLLS2 not supported

VLLS2 power mode is not supported on this device.

3.4.3 PMC configuration

This section summarizes how the module has been configured in the chip. For a comprehensive description of the module itself, see the module's dedicated chapter.

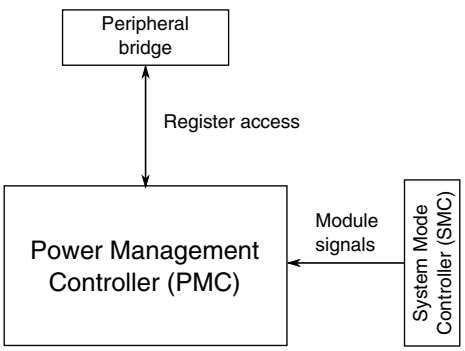

Figure 3-6. PMC configuration

Table 3-13. Reference links to related information

Topic	Related module	Reference
Full description	PMC	PMC
System memory map	—	System memory map
Power management	—	Power management
Full description	System mode controller (SMC)	System Mode Controller
—	Reset control module (RCM)	Reset

3.4.4 MCM configuration

This section summarizes how the module has been configured in the chip. For a comprehensive description of the module itself, see the module's dedicated chapter.

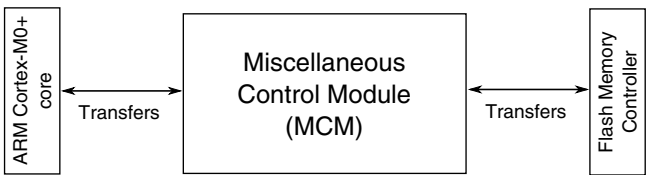

Figure 3-7. MCM configuration

Table 3-14. Reference links to related information

Topic	Related module	Reference
Full description	Miscellaneous control module (MCM)	MCM
System memory map	—	System memory map
Clocking	—	Clock distribution
Power management	—	Power management
Private peripheral bus (PPB)	ARM Cortex-M0+ core	ARM Cortex-M0+ core
Transfer	Flash memory controller	Flash memory controller

3.4.5 Crossbar-light switch configuration

This section summarizes how the module has been configured in the chip. For a comprehensive description of the module itself, see the module's dedicated chapter.

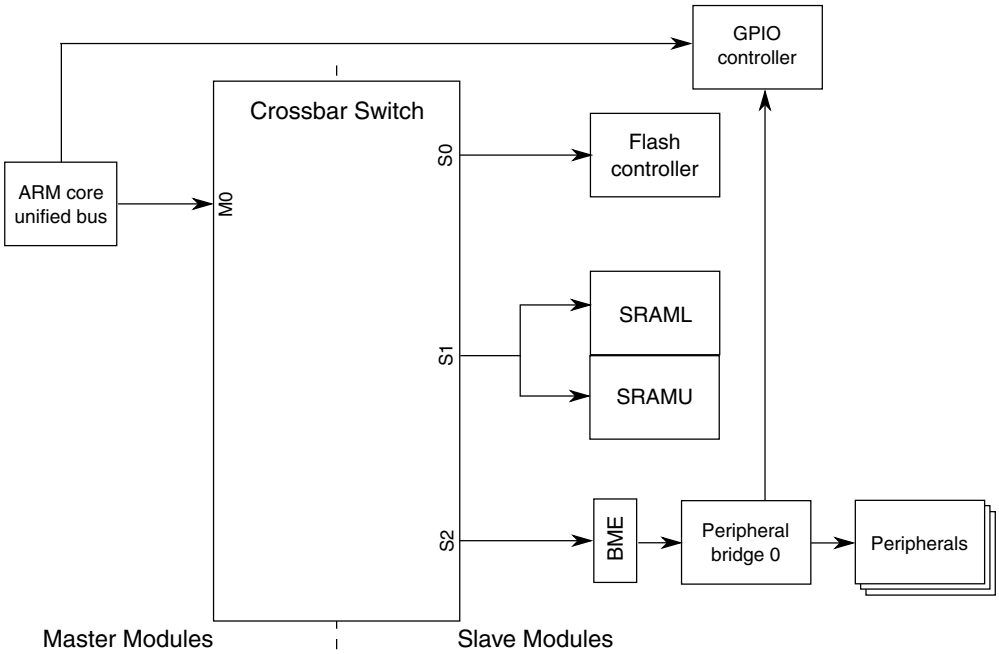

Figure 3-8. Crossbar-light switch integration

Table 3-15. Reference links to related information

Topic	Related module	Reference
Full description	Crossbar switch	Crossbar switch
System memory map	—	System memory map
Clocking	—	Clock distribution
Crossbar switch master	ARM Cortex-M0+ core	ARM Cortex-M0+ core
Crossbar switch slave	Flash memory controller	Flash memory controller
Crossbar switch slave	SRAM controller	SRAM configuration
Crossbar switch slave	Peripheral bridge	Peripheral bridge
2-ported peripheral	GPIO controller	GPIO controller

3.4.5.1 Crossbar-light switch master assignments

The masters connected to the crossbar switch are assigned as follows:

Master module	Master port number
ARM core unified bus	0

3.4.5.2 Crossbar switch slave assignments

This device contains 3 slaves connected to the crossbar switch.

The slave assignment is as follows:

Slave module	Slave port number
Flash memory controller	0
SRAM controller	1
Peripheral bridge 0	2

3.4.6 Peripheral bridge configuration

This section summarizes how the module has been configured in the chip. For a comprehensive description of the module itself, see the module's dedicated chapter.

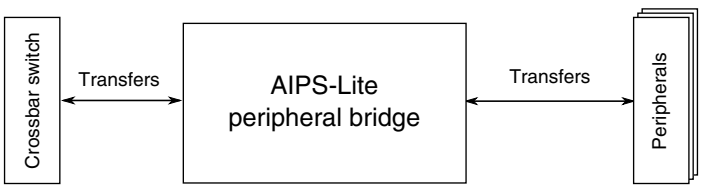

Figure 3-9. Peripheral bridge configuration

Table 3-16. Reference links to related information

Topic	Related module	Reference
Full description	Peripheral bridge (AIPS-Lite)	Peripheral bridge (AIPS-Lite)
System memory map	—	System memory map
Clocking	—	Clock distribution
Crossbar switch	Crossbar switch	Crossbar switch

3.4.6.1 Number of peripheral bridges

This device contains one peripheral bridge.

3.4.6.2 Memory maps

The peripheral bridges are used to access the registers of most of the modules on this device. See AIPS0 Memory Map for the memory slot assignment for each module.

3.4.7 Computer operating properly (COP) watchdog configuration

This section summarizes how the module has been configured in the chip.

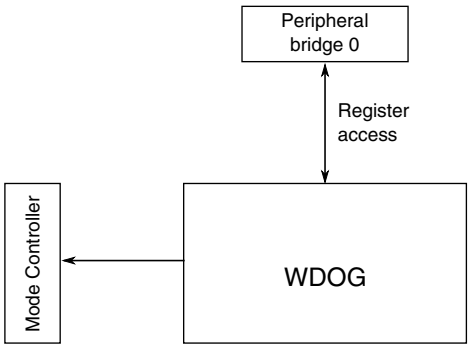

Figure 3-10. COP watchdog configuration

Table 3-17. Reference links to related information

Topic	Related module	Reference
Clocking	—	Clock distribution
Power management	—	Power management
Programming model	System integration module (SIM)	SIM

3.4.7.1 COP clocks

The multiple clock inputs for the COP are the 1 kHz clock and the bus clock.

3.4.7.2 COP watchdog operation

The COP watchdog is intended to force a system reset when the application software fails to execute as expected. To prevent a system reset from the COP timer (when it is enabled), the application software must reset the COP counter periodically. If the application program gets lost and fails to reset the COP counter before it times out, a system reset is generated to force the system back to a known starting point.

After any reset, the COP watchdog is enabled. If the COP watchdog is not used in an application, it can be disabled by clearing SIM_COPCTRL[COPT].

The COP counter is reset by writing 0x55 and 0xAA (in that order) to the address of the SIM's Service COP (SRVCOP) register during the selected timeout period. Writes do not affect the data in the SRVCOP register. As soon as the write sequence is complete, the COP timeout period is restarted. If the program fails to perform this restart during the timeout period, the microcontroller resets. Also, if any value other than 0x55 or 0xAA is written to the SRVCOP register, the microcontroller immediately resets.

SIM_COPCTRL[COPCLKS] selects the clock source used for the COP timer. The clock source options are either the bus clock or an internal 1 kHz clock source. With each clock source, there are three associated timeouts controlled by SIM_COPCTRL[COPT]. The following table summarizes the control functions of SIM_COPCTRL[COPCLKS] and SIM_COPCTRL[COPT] fields. The COP watchdog defaults to operation from the 1 kHz clock source and the longest timeout for that clock source (2^{10} cycles).

Table 3-18. COP configuration options

Control bits		Clock source	COP window opens (SIM_COPCTRL[COPW]=1)	COP overflow count
SIM_COPCTRL[COPCLKS]	SIM_COPCTRL[COPT]			
N/A	00	N/A	N/A	COP is disabled.
0	01	1 kHz	N/A	2^5 cycles (32 ms)
0	10	1 kHz	N/A	2^8 cycles (256 ms)
0	11	1 kHz	N/A	2^{10} cycles (1024 ms)
1	01	Bus	6,144 cycles	2^{13} cycles
1	10	Bus	49,152 cycles	2^{16} cycles
1	11	Bus	196,608 cycles	2^{18} cycles

After the bus clock source is selected, windowed COP operation is available by setting SIM_COPCTRL[COPW]. In this mode, writes to the SIM_SRVCOP register to clear the COP timer must occur in the last 25% of the selected timeout period. A premature write immediately resets the chip. When the 1 kHz clock source is selected, windowed COP operation is not available.

The COP counter is initialized by the first writes to the SIM_COPCTRL register and after any system reset. Subsequent writes to the SIM_COPCTRL register have no effect on COP operation. Even if an application uses the reset default settings of SIM_COPCTRL[COPT], SIM_COPCTRL[COPCLKS], and SIM_COPCTRL[COPW] fields, the user should write to the write-once SIM_COPCTRL register during reset initialization to lock in the settings. This approach prevents accidental changes if the application program becomes lost.

The write to the SIM_SRVCOP register that services (clears) the COP counter should not be placed in an interrupt service routine (ISR) because the ISR could continue to be executed periodically even if the main application program fails.

If the bus clock source is selected, the COP counter does not increment while the microcontroller is in Debug mode or while the system is in Stop (including VLPS) mode. The COP counter resumes when the microcontroller exits Debug or Stop mode.

If the 1 kHz clock source is selected, the COP counter is re-initialized to zero upon entry to either debug mode or stop (including VLPS) mode. The counter begins from zero upon exit from debug mode or stop mode.

Regardless of the clock selected, the COP is disabled when the chip enters a VLLSx mode. Upon a reset that wakes the chip from the VLLSx mode, the COP is reinitialized and enabled as for any reset.

3.4.7.3 Clock gating

This family of devices includes clock gating control for each peripheral, that is, the clock to each peripheral can explicitly be gated on or off, using clock-gate control bits in the SIM module.

3.5 Clock modules

3.5.1 MCG configuration

This section summarizes how the module has been configured in the chip. For a comprehensive description of the module itself, see the module's dedicated chapter.

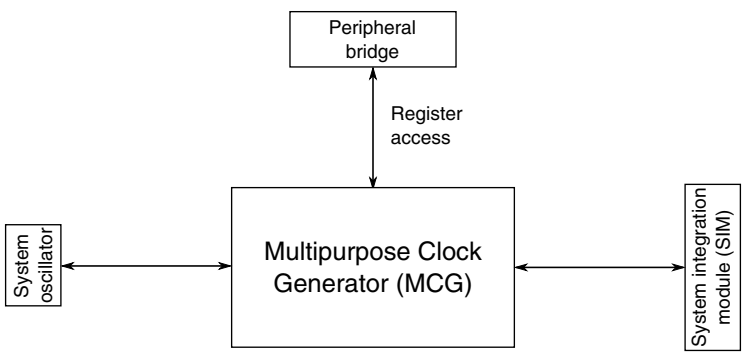

Figure 3-11. MCG configuration

Table 3-19. Reference links to related information

Topic	Related module	Reference
Full description	MCG	MCG

Table continues on the next page...

Table 3-19. Reference links to related information (continued)

Topic	Related module	Reference
System memory map	—	System memory map
Clocking	—	Clock distribution
Power management	—	Power management
Signal multiplexing	Port control	Signal multiplexing

3.5.1.1 MCG FLL modes

The MCGFLLCLK frequency is limited to 48 MHz at maximum in this device. The digitally-controller oscillator (DCO) is limited to the two lowest range settings, that is, MCG_C4[DRST_DRS] must be set to either 0b00 or 0b01.

3.5.2 OSC configuration

This section summarizes how the module has been configured in the chip. For a comprehensive description of the module itself, see the module's dedicated chapter.

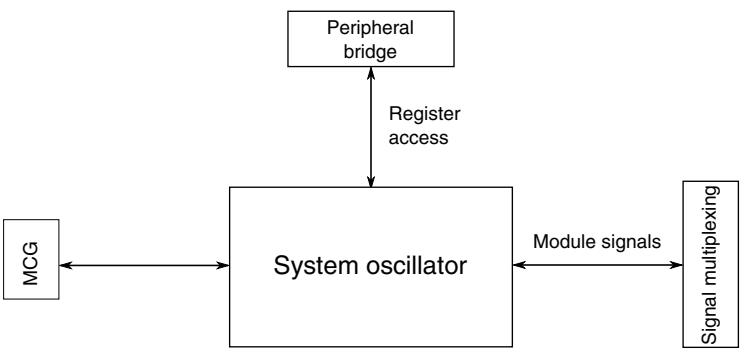

Figure 3-12. OSC configuration

Table 3-20. Reference links to related information

Topic	Related module	Reference
Full description	OSC	OSC
System memory map	—	System memory map
Clocking	—	Clock distribution
Power management	—	Power management
Signal multiplexing	Port control	Signal multiplexing
Full description	MCG	MCG

3.5.2.1 OSC modes of operation with MCG

The most common method of controlling the OSC block is through MCG_C1[CLKS] and the fields of MCG_C2 register to configure for crystal or external clock operation. Since the OSC is limited to support 32 kHz VLP oscillation mode only, the range, gain mode selections from MCG are ignored by the OSC. OSC_CR also provides control for enabling the OSC module and configuring internal load capacitors for the EXTAL and XTAL pins. See the OSC and MCG chapters for more details.

3.6 Memories and memory interfaces

3.6.1 Flash memory configuration

This section summarizes how the module has been configured in the chip. For a comprehensive description of the module itself, see the module's dedicated chapter.

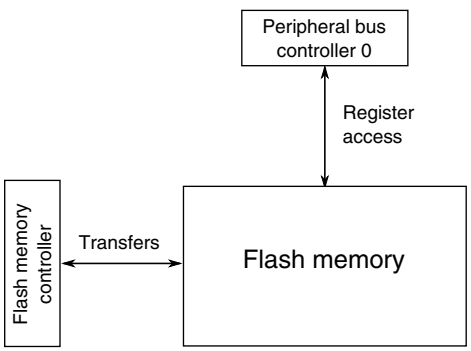

Figure 3-13. Flash memory configuration

Table 3-21. Reference links to related information

Topic	Related module	Reference
Full description	Flash memory	Flash memory
System memory map	—	System memory map
Clocking	—	Clock distribution
Transfers	Flash memory controller	Flash memory controller
Register access	Peripheral bridge	Peripheral bridge

3.6.1.1 Flash memory sizes

The devices covered in this document contain 1 program flash block consisting of 1 KB sectors.

The amounts of flash memory for the devices covered in this document are:

Table 3-22. KL02 flash memory size

Freescale part number	Program flash (KB)	Block 0 (P-flash) address range
MKL02Z8VFG4(R)	8	0x0000_0000 – 0x0000_1FFF
MKL02Z16VFG4(R)	16	0x0000_0000 – 0x0000_3FFF
MKL02Z32VFG4(R)	32	0x0000_0000 – 0x0000_7FFF
MKL02Z16VFK4(R)	16	0x0000_0000 – 0x0000_3FFF
MKL02Z32VFK4(R)	32	0x0000_0000 – 0x0000_7FFF
MKL02Z16VFM4(R)	16	0x0000_0000 – 0x0000_3FFF
MKL02Z32VFM4(R)	32	0x0000_0000 – 0x0000_7FFF

3.6.1.2 Flash memory map

The flash memory and the flash registers are located at different base addresses as shown in the following figure. The base address for each is specified in System memory map.

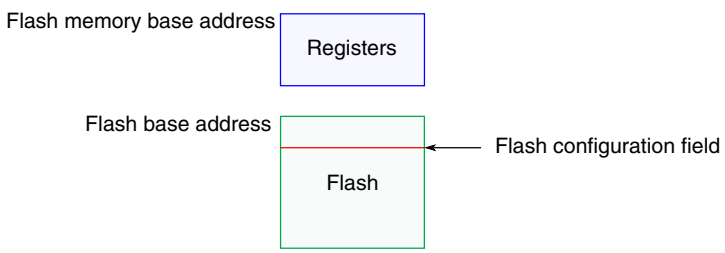

Figure 3-14. Flash memory map

The on-chip flash memory is implemented in a portion of the allocated Flash range to form a contiguous block in the memory map beginning at address 0x0000_0000. See Flash and EEPROM memory sizes for details of supported ranges.

Access to the flash memory ranges outside the amount of flash on the device causes the bus cycle to be terminated with an error followed by the appropriate response in the requesting bus master.

3.6.1.3 Flash security

For information on how flash security is implemented on this device, see Chip Security.

3.6.1.4 Flash modes

The flash memory chapter defines two modes of operation: NVM normal and NVM special modes. On this device, the flash memory only operates in NVM normal mode. All references to NVM special mode must be ignored.

3.6.1.5 Erase all flash contents

In addition to software, the entire flash memory may be erased external to the flash memory via the SW-DP debug port by setting MDM-AP CONTROL[0]. MDM-AP STATUS[0] is set to indicate the mass erase command has been accepted. MDM-AP STATUS[0] is cleared when the mass erase completes.

3.6.1.6 FTFA_FOPT register

The flash memory's FTFA_FOPT register allows the user to customize the operation of the MCU at boot time. See FOPT boot options for details of its definition.

3.6.2 Flash memory controller configuration

This section summarizes how the module has been configured in the chip. For a comprehensive description of the module itself, see the module’s dedicated chapter.

See MCM_PLACR register description for details on the reset configuration of the FMC.

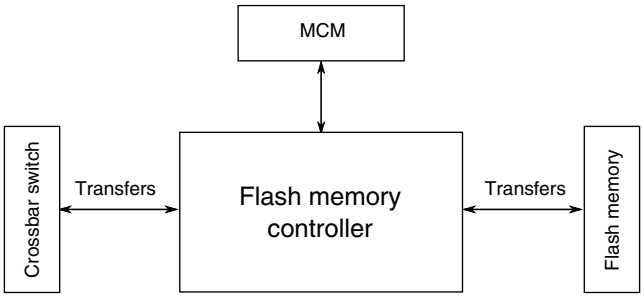

Figure 3-15. Flash memory controller configuration

Table 3-23. Reference links to related information

Topic	Related module	Reference
Full description	Flash memory controller	Flash memory controller
System memory map	—	System memory map
Clocking	—	Clock distribution
Transfers	Flash memory	Flash memory
Transfers	Crossbar switch	Crossbar switch
Register access	MCM	MCM

3.6.3 SRAM configuration

This section summarizes how the module has been configured in the chip.

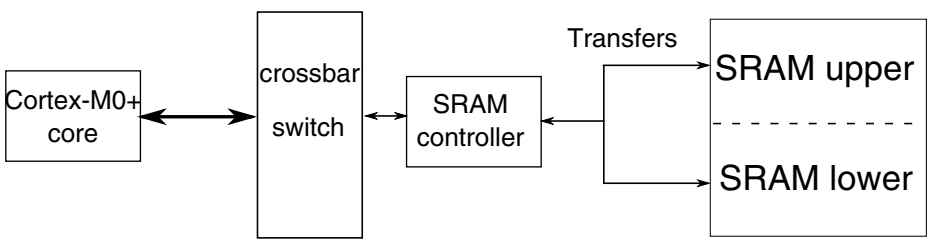

Figure 3-16. SRAM configuration

Table 3-24. Reference links to related information

Topic	Related module	Reference
Full description	SRAM	SRAM
System memory map	—	System memory map
Clocking	—	Clock distribution
ARM Cortex-M0+ core	—	ARM Cortex-M0+ core

3.6.3.1 SRAM sizes

This device contains SRAM which could be accessed by bus masters through the cross-bar switch. The amount of SRAM for the devices covered in this document is shown in the following table.

Table 3-25. KL02 SRAM memory size

Freescale part number	RAM
MKL02Z8VFG4(R)	1 KB
MKL02Z16VFG4(R)	2 KB
MKL02Z32VFG4(R)	4 KB
MKL02Z16VFK4(R)	2 KB
MKL02Z32VFK4(R)	4 KB
MKL02Z16VFM4(R)	2 KB
MKL02Z32VFM4(R)	4 KB

3.6.3.2 SRAM ranges

The on-chip SRAM is split into two ranges, 1/4 is allocated SRAM_L and 3/4 is allocated to SRAM_U.

The on-chip RAM is implemented such that the SRAM_L and SRAM_U ranges form a contiguous block in the memory map. As such:

- SRAM_L is anchored to 0x1FFF_FFFF and occupies the space before this ending address.
- SRAM_U is anchored to 0x2000_0000 and occupies the space after this beginning address.

Valid address ranges for SRAM_L and SRAM_U are then defined as:

- SRAM_L = [0x2000_0000–(SRAM_size/4)] to 0x1FFF_FFFF
- SRAM_U = 0x2000_0000 to [0x2000_0000+(SRAM_size*(3/4))-1]

This is illustrated in the following figure.

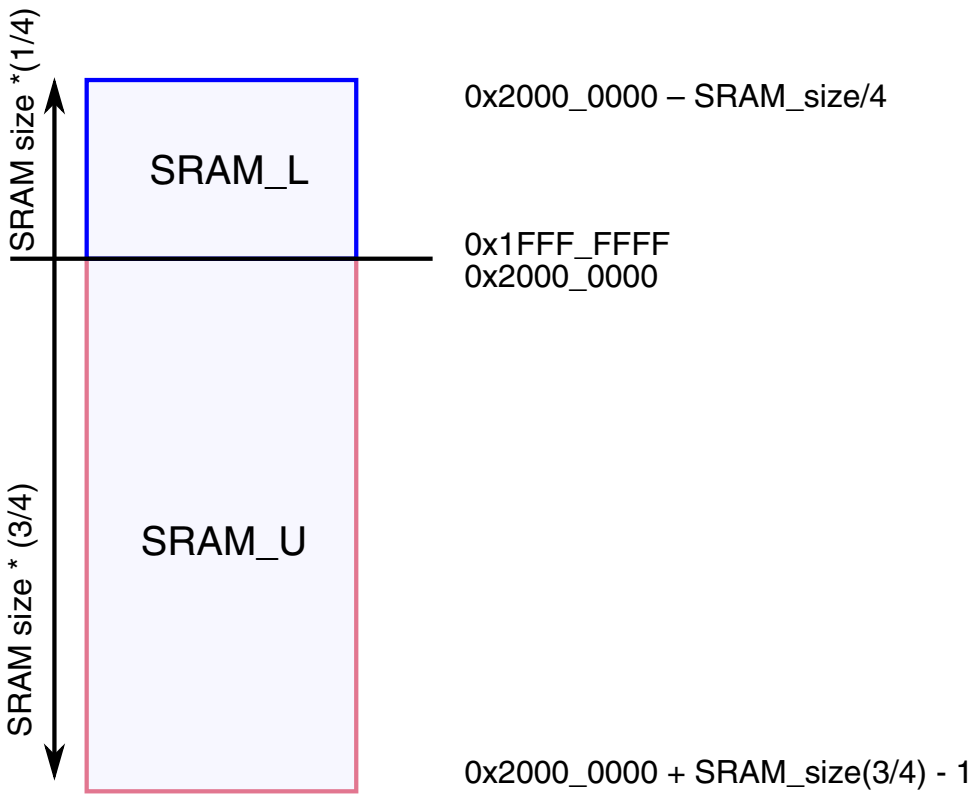

Figure 3-17. SRAM blocks memory map

For example, for a device containing 16 KB of SRAM, the ranges are:

- SRAM_L: 0x1FFF_F000 – 0x1FFF_FFFF
- SRAM_U: 0x2000_0000 – 0x2000_2FFF

3.6.3.3 SRAM retention in low power modes

The SRAM is retained down to VLLS3 mode. In VLLS1 and VLLS0, no SRAM is retained.

3.7 Analog

3.7.1 12-bit SAR ADC configuration

This section summarizes how the module has been configured in the chip. For a comprehensive description of the module itself, see the module's dedicated chapter.

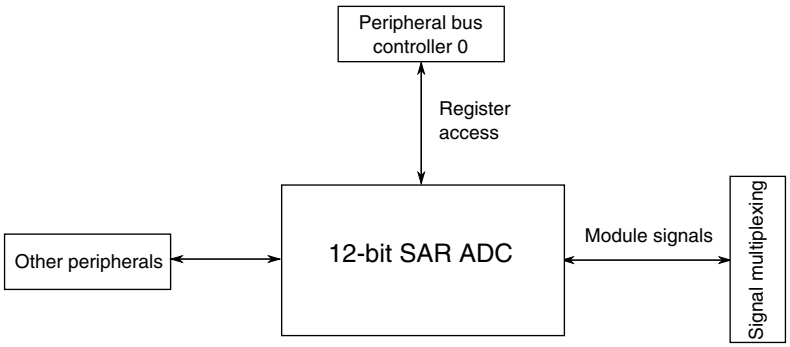

Figure 3-18. 12-bit SAR ADC configuration

Table 3-26. Reference links to related information

Topic	Related module	Reference
Full description	12-bit SAR ADC	12-bit SAR ADC
System memory map	—	System memory map
Clocking	—	Clock distribution
Power management	—	Power management
Signal multiplexing	Port control	Signal multiplexing

3.7.1.1 ADC instantiation information

This device contains one 12-bit successive approximation ADC with up to 14 channels.

The ADC supports both software and hardware triggers. The hardware trigger sources are listed in the Module-to-Module section.

The number of ADC channels present on the device is determined by the pinout of the specific device package and is shown in the following table.

Table 3-27. Number of KL02 ADC channels

Device	Number of ADC channels
MKL02Z8VFG4(R)	6
MKL02Z16VFG4(R)	6
MKL02Z32VFG4(R)	6
MKL02Z32CAF4(R)	10
MKL02Z16VFK4(R)	12
MKL02Z32VFK4(R)	12
MKL02Z16VFM4(R)	14
MKL02Z32VFM4(R)	14

3.7.1.2 ADC0 connections/channel assignment

3.7.1.2.1 ADC0 channel assignment

ADC Channel (SC1n[ADCH])	Channel	Input signal (SC1n[DIFF]= 1)	Input signal (SC1n[DIFF]= 0)
00000	AD0	Reserved	ADC0_SE0
00001	AD1	Reserved	ADC0_SE1
00010	AD2	Reserved	ADC0_SE2
00011	AD3	Reserved	ADC0_SE3
00100	AD4	Reserved	ADC0_SE4
00101	AD5	Reserved	Reserved
00110	AD6	Reserved	Reserved
00111	AD7	Reserved	Reserved
01000	AD8	Reserved	ADC0_SE5
01001	AD9	Reserved	ADC0_SE6
01010	AD10	Reserved	ADC0_SE7
01011	AD11	Reserved	ADC0_SE8
01100	AD12	Reserved	ADC0_SE9
01101	AD13	Reserved	ADC0_SE10
01110	AD14	Reserved	ADC0_SE11
01111	AD15	Reserved	ADC0_SE12
10000	AD16	Reserved	ADC0_SE13
10001	AD17	Reserved	Reserved
10010	AD18	Reserved	Reserved
10011	AD19	Reserved	Reserved
10100	AD20	Reserved	Reserved
10101	AD21	Reserved	Reserved
10110	AD22	Reserved	Reserved
10111	AD23	Reserved	Reserved
11000	AD24	Reserved	Reserved
11001	AD25	Reserved	Reserved
11010	AD26	Temperature Sensor (Diff)	Temperature Sensor (S.E)
11011	AD27	Bandgap (Diff)[1]	Bandgap (S.E)[1]
11100	AD28	Reserved	Reserved
11101	AD29	-VREFH (Diff)	VREFH (S.E)
11110	AD30	Reserved	VREFL
11111	AD31	Module Disabled	Module Disabled

3.7.1.3 ADC analog supply and reference connections

This device internally connects VDDA to VDD and VSSA to VSS.

This device contains separate VREFH and VREFL pins on 32-pin and higher devices. These pins are internally connected to VDD and VSS respectively, on packages less than 32-pin.

3.7.1.4 ADC Reference Options

The ADC supports the following references:

- VREFH/VREFL - connected as the primary reference option
- VDDA - connected as the V_{ALT} reference option

3.7.1.5 Alternate clock

For this device, the alternate clock is connected to the external reference clock (OSCERCLK).

NOTE

This clock option is only usable when OSCERCLK is in the MHz range. A system with OSCERCLK in the kHz range has the optional clock source below minimum ADC clock operating frequency.

3.7.2 CMP configuration

This section summarizes how the module has been configured in the chip. For a comprehensive description of the module itself, see the module's dedicated chapter.

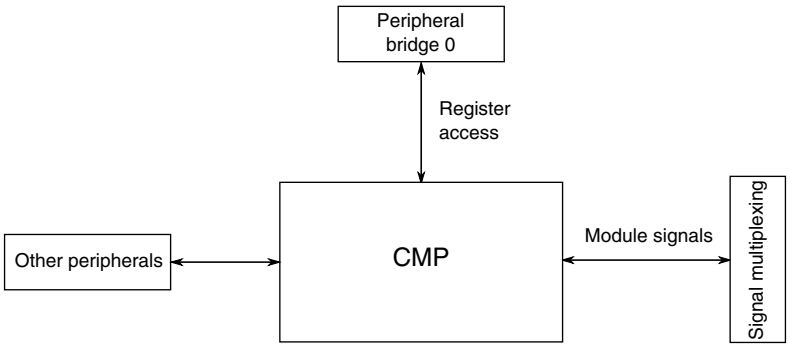

Figure 3-19. CMP configuration

Table 3-28. Reference links to related information

Topic	Related module	Reference
Full description	Comparator (CMP)	Comparator
System memory map	—	System memory map
Clocking	—	Clock distribution
Power management	—	Power management
Signal multiplexing	Port control	Signal multiplexing

3.7.2.1 CMP instantiation information

The device includes one high-speed comparator and two 8-input multiplexers for both the inverting and non-inverting inputs of the comparator. Each CMP input channel connects to both muxes. Two of the channels are connected to internal sources, leaving resources to support up to 6 input pins. See the channel assignment table for a summary of CMP input connections for this device.

The CMP also includes one 6-bit DAC with a 64-tap resistor ladder network, which provides a selectable voltage reference for applications where voltage reference is needed for internal connection to the CMP.

The CMP can be optionally on in all modes except VLLS0.

The CMP has several module-to-module interconnects in order to facilitate ADC triggering, TPM triggering, and UART IR interfaces. For complete details on the CMP module interconnects, see the Module-to-Module section.

The CMP does not support window compare function and a 0 must always be written to CMP_CR1[WE]. The sample function has limited functionality since the SAMPLE input to the block is not connected to a valid input. Usage of sample operation is limited to a divided version of the bus clock (CMP_CR1[SE] = 0).

Due to the pin number limitation, the CMP pass through mode is not supported by this device, so the CMPx_MUXCR[PSTM] must be left as 0.

3.7.2.2 CMP input connections

The following table shows the fixed internal connections to the CMP.

Table 3-29. CMP input connections

CMP inputs	CMP0
IN0	CMP0_IN0
IN1	CMP0_IN1
IN2	CMP0_IN2
IN3	CMP0_IN3
IN4	—
IN5	—
IN6	Bandgap[1]
IN7	6-bit DAC0 reference

1. This is the PMC bandgap 1V reference voltage. Prior to using as CMP input, ensure that you enable the bandgap buffer by setting PMC_REGSC[BGBE]. See the device data sheet for the bandgap voltage (V_{BG}) specification.

3.7.2.3 CMP external references

The 6-bit DAC sub-block supports selection of two references. For this device, the references are connected as follows:

- VREFH–V_{in1} input. When using VREFH, any ADC conversion using this same reference at the same time is negatively impacted.
- VDD–V_{in2} input

3.7.2.4 CMP trigger mode

The CMP and 6-bit DAC sub-block supports trigger mode operation when CMP_CR1[TRIGM] is set. When trigger mode is enabled, the trigger event will initiate a compare sequence that must first enable the CMP and DAC prior to performing a CMP operation and capturing the output. In this device, control for this two-staged sequencing is provided from the LPTMR. The LPTMR triggering output is always enabled when the LPTMR is enabled. The first signal is supplied to enable the CMP and DAC and is asserted at the same time as the TCF flag is set. The delay to the second signal that triggers the CMP to capture the result of the compare operation is dependent on the LPTMR configuration.

- In Time Counter mode with prescaler enabled, the delay is 1/2 Prescaler output period.
- In Time Counter mode with prescaler bypassed, the delay is 1/2 Prescaler clock period.

The delay between the first signal from LPTMR and the second signal from LPTMR must be greater than the analog comparator initialization delay as defined in the device datasheet.

3.8 Timers

3.8.1 Timer/PWM module configuration

This section summarizes how the module has been configured in the chip. For a comprehensive description of the module itself, see the module's dedicated chapter.

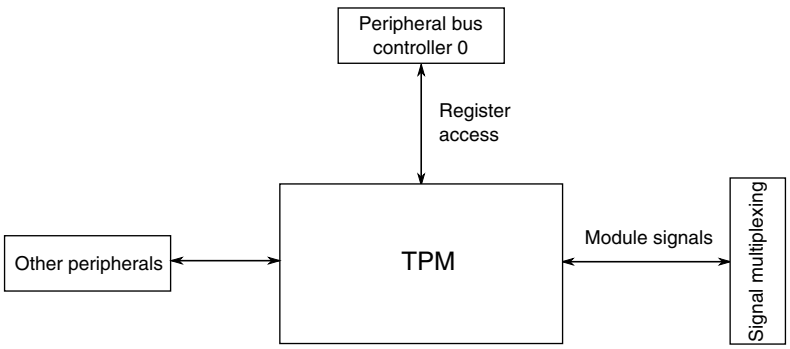

Figure 3-20. TPM configuration

Table 3-30. Reference links to related information

Topic	Related module	Reference
Full description	Timer/PWM module	Timer/PWM module
System memory map	—	System memory map
Clocking	—	Clock distribution
Power management	—	Power management
Signal multiplexing	Port control	Signal multiplexing

3.8.1.1 TPM instantiation information

This device contains two low power TPM modules (TPM). All TPM modules in the device are configured only as basic TPM function, do not support quadrature decoder function, and all can be functional in Stop/VLPS mode. The clock source is either external or internal in Stop/VLPS mode.

The following table shows how these modules are configured.

Table 3-31. TPM configuration

TPM instance	Number of channels	Features/usage
TPM0	2	Basic TPM,functional in Stop/VLPS mode
TPM1	2	Basic TPM,functional in Stop/VLPS mode

There are several connections to and from the TPMs in order to facilitate customer use cases. For complete details on the TPM module interconnects please refer to the Module-to-Module section.

3.8.1.2 Clock options

The TPM blocks are clocked from a single TPM clock that can be selected from OSCERCLK, MCGIRCLK, or MCGFLLCLK. The selected source is controlled by SIM_SOPT2[TPMSRC] .

Each TPM also supports an external clock mode (TPM_SC[CMOD]=1x) in which the counter increments after a synchronized (to the selected TPM clock source) rising edge detect of an external clock input. The available external clock (either TPM_CLKIN0 or TPM_CLKIN1) is selected by SIM_SOPT4[TPMxCLKSEL] control register. To guarantee valid operation the selected external clock must be less than half the frequency of the selected TPM clock source.

3.8.1.3 Trigger options

Each TPM has a selectable trigger input source controlled by the TPMx_CONF[TRGSEL] field to use for starting the counter and/or reloading the counter. The options available are shown in the following table.

Table 3-32. TPM trigger options

TPMx_CONF[TRGSEL]	Selected source
0000	External trigger pin input (EXTRG_IN)

Table continues on the next page...

Table 3-32. TPM trigger options (continued)

TPMx_CONF[TRGSEL]	Selected source
0001	CMP0 output
0010	Reserved
0011	Reserved
0100	Reserved
0101	Reserved
0110	Reserved
0111	Reserved
1000	TPM0 overflow
1001	TPM1 overflow
1010	Reserved
1011	Reserved
1100	Reserved
1101	Reserved
1110	LPTMR trigger
1111	Reserved

3.8.1.4 Global timebase

Each TPM has a global timebase feature controlled by the TPMx_CONF[GTBEEN] bit. TPM1 is configured as the global time when this option is enabled.

3.8.1.5 TPM interrupts

The TPM has multiple sources of interrupt. However, these sources are OR'd together to generate a single interrupt request to the interrupt controller. When an TPM interrupt occurs, read the TPM status registers to determine the exact interrupt source.

3.8.2 Low-power timer configuration

This section summarizes how the module has been configured in the chip. For a comprehensive description of the module itself, see the module’s dedicated chapter.

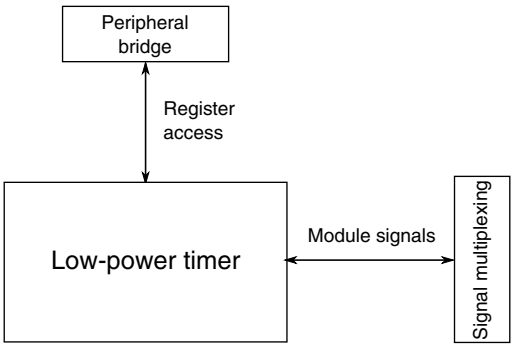

Figure 3-21. LPT configuration

Table 3-33. Reference links to related information

Topic	Related module	Reference
Full description	Low-power timer	Low-power timer
System memory map	—	System memory map
Clocking	—	Clock distribution
Power management	—	Power management
Signal Multiplexing	Port control	Signal multiplexing

3.8.2.1 LPTMR instantiation information

The low-power timer (LPTMR) allows operation during all power modes. The LPTMR can operate as a real-time interrupt or pulse accumulator. It includes a 2^N prescaler (real-time interrupt mode) or glitch filter (pulse accumulator mode).

The LPTMR can be clocked from the internal reference clock, the internal 1 kHz LPO, OSCERCLK, or an external 32.768 kHz crystal.

An interrupt is generated (and the counter may reset) when the counter equals the value in the 16-bit compare register.

3.8.2.2 LPTMR pulse counter input options

LPTMR_CSR[TPS] configures the input source used in pulse counter mode. The following table shows the chip-specific input assignments for this field.

LPTMR_CSR[TPS]	Pulse counter input number	Chip input
00	0	CMP0 output
01	1	LPTMR_ALT1 pin
10	2	LPTMR_ALT2 pin

Table continues on the next page...

LPTMR_CSR[TPS]	Pulse counter input number	Chip input
11	3	LPTMR_ALT3 pin

3.8.2.3 LPTMR prescaler/glitch filter clocking options

The prescaler and glitch filter of the LPTMR module can be clocked from one of four sources determined by LPTMR0_PSR[PCS]. The following table shows the chip-specific clock assignments for this field.

NOTE

The chosen clock must remain enabled if the LPTMR is to continue operating in all required low-power modes.

LPTMR0_PSR[PCS]	Prescaler/glitch filter clock number	Chip clock
00	0	MCGIRCLK—internal reference clock (not available in VLLS modes)
01	1	LPO—1 kHz clock (not available in VLLS0 mode)
10	2	ERCLK32K (not available in VLLS0 mode when using 32 kHz oscillator)
11	3	OSCERCLK—external reference clock (not available in VLLS0 mode)

See Clock Distribution for more details on these clocks.

3.9 Communication interfaces

3.9.1 SPI configuration

This section summarizes how the module has been configured in the chip. For a comprehensive description of the module itself, see the module's dedicated chapter.

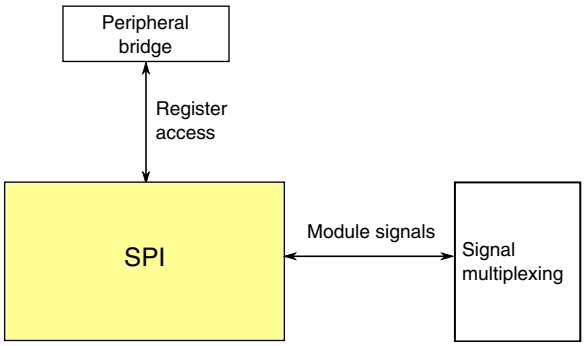

Figure 3-22. SPI configuration

Table 3-34. Reference links to related information

Topic	Related module	Reference
Full description	SPI	SPI
System memory map	—	System memory map
Clocking	—	Clock distribution
Signal multiplexing	Port control	Signal multiplexing

3.9.1.1 SPI instantiation information

This device contains one SPI module that supports 8-bit data length.

SPI0 is clocked on the bus clock.

The SPI can operate in VLPS mode. When the SPI is operating in VLPS mode, it will operate as a slave.

SPI can wake the MCU from VLPS mode upon reception of SPI data in slave mode.

3.9.2 I2C configuration

This section summarizes how the module has been configured in the chip. For a comprehensive description of the module itself, see the module's dedicated chapter.

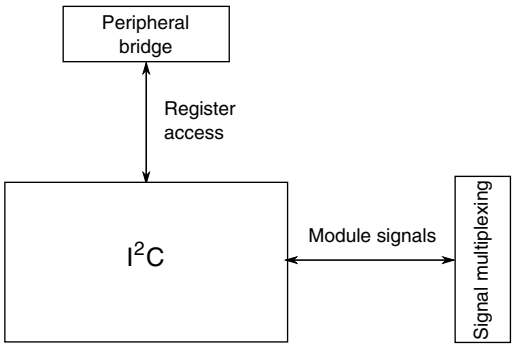

Figure 3-23. I2C configuration

Table 3-35. Reference links to related information

Topic	Related module	Reference
Full description	I^2C	I^2C
System memory map	—	System memory map
Clocking	—	Clock distribution
Power management	—	Power management
Signal multiplexing	Port control	Signal multiplexing

3.9.2.1 IIC instantiation information

This device has two IIC modules. IIC0 is clocked by the bus clock and IIC1 is clocked by the system clock. Clocking IIC1 at the faster system clock is needed to support standard IIC communication rates of 100 kbit/s in VLPR mode.

When the package pins associated with IIC have their mux select configured for IIC operation, the pins (SCL and SDA) are driven in a pseudo open drain configuration.

The digital glitch filter implemented in the IIC0 module, controlled by the I2C0_FLT[FLT] registers, is clocked from the bus clock and thus has filter granularity in bus clock cycle counts.

The digital glitch filter implemented in the IIC1 module, controlled by the I2C1_FLT[FLT] registers, is clocked from the system clock and thus has filter granularity in system clock cycle counts.

3.9.3 UART configuration

This section summarizes how the module has been configured in the chip. For a comprehensive description of the module itself, see the module's dedicated chapter.

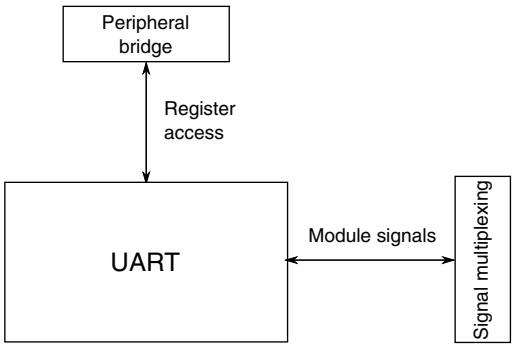

Figure 3-24. UART configuration

Table 3-36. Reference links to related information

Topic	Related module	Reference
Full description	UART0	UART
System memory map	—	System memory map
Clocking	—	Clock distribution
Power management	—	Power management
Signal multiplexing	Port control	Signal multiplexing

3.9.3.1 UART0 overview

The UART0 module supports basic UART, x4 to x32 oversampling of baud-rate.

This module supports LIN slave operation.

The module can remain functional in VLPS mode provided the clock it is using remains enabled.

ISO7816 protocol is intended to be handled in software for this product. To support smart card reading, TxD pin can be configured as pseudo open drain for 1-wire half-duplex like ISO7816 communication via SIM_SOPT5[UART0ODE].

3.10 Human-machine interfaces (HMI)

3.10.1 GPIO configuration

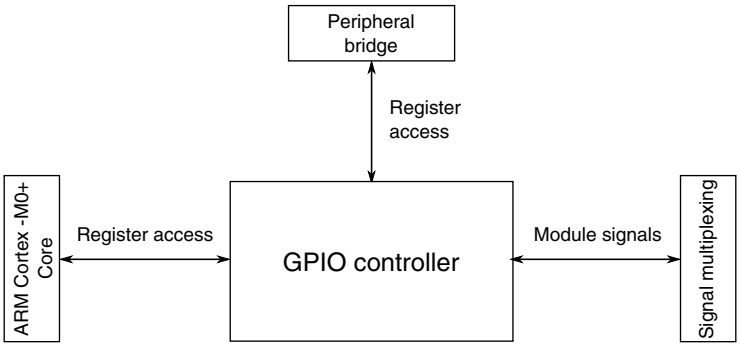

Figure 3-25. GPIO configuration

Table 3-37. Reference links to related information

Topic	Related module	Reference
Full description	GPIO	GPIO
System memory map	—	System memory map
Clocking	—	Clock distribution
Power management	—	Power management
Crossbar switch	Crossbar switch	Crossbar switch
Signal multiplexing	Port control	Signal multiplexing

3.10.1.1 GPIO instantiation information

The device includes four pins, PTB0, PTB1, PTA12, and PTA13, with high current drive capability. These pins can be used to drive LED or power MOSFET directly. The high drive capability applies to all functions which are multiplexed on these pins (UART, TPM, SPI...etc)

The device includes two pins, PTB3 and PTB4, with true open drain setting. These pins have the capability to support 5 V voltage input in 3.3 V systems.

3.10.1.1.1 Pull devices and directions

The pull devices are enabled out of POR only on $\overline{\text{RESET_b}}$, $\overline{\text{NMI_b}}$ and respective SWD signals. Other pins can be enabled by writing to PORTx_PCRn[PE].

All the pins are hard wired to be pullup except for SWD_CLK. The state will be reflected in the PORTx_PCRn[PS] field.

3.10.1.2 Port control and interrupt summary

The following table provides more information regarding the Port Control and Interrupt configurations .

Table 3-38. Ports summary

Feature	Port A	Port B
Pull select control	No	No
Pull select at reset	PTA0=Pull down, Others=Pull up	Pull up
Pull enable control	Yes	Yes
Pull enable at reset	PTA0/PTA2/$\overline{\text{RESET_b}}$=Enabled; Others=Disabled	PTB5=Enabled; Others=Disabled
Slew rate enable control	No	No
Slew rate enable at reset	PTA2/PTA6/PTA7=Disabled; Others=Enabled	PTB0= Disabled; Others=Enabled
Passive filter enable control	$\overline{\text{RESET_b}}$ only	PTB5 only
Passive filter enable at reset	$\overline{\text{RESET_b}}$=Enabled; Others=Disabled	Disabled
Open drain enable control[1]	No	No
Open drain enable at reset	Disabled	Disabled
Drive strength enable control	PTA12/PTA13 only	PTB0/PTB1 only
Drive strength enable at reset	Disabled	Disabled
Pin mux control	Yes	Yes
Pin mux at reset	PTA0/PTA2=ALT3; Others=ALT0	PTB5=ALT3; Others=ALT0
Lock bit	No	No
Interrupt request	PTA0/PTA1/PTA7/PTA10/PTA11/PTA12 only	PTB0/PTB1/PTB2/PTB3/PTB4/PTB5/ PTB6/PTB7 only
Digital glitch filter	No	No

1. UART signals can be configured for open-drain using SIM_SOPT5 register. IIC signals are automatically enabled for open drain when selected.

3.10.1.3 GPIO accessibility in the memory map

The GPIO is multi-ported and can be accessed directly by the core with zero wait states at base address 0xF800_0000. It can also be accessed by the core through the cross bar/ AIPS interface at 0x400F_F000 and at an aliased slot (15) at address 0x4000_F000. All BME operations to the GPIO space can be accomplished referencing the aliased slot (15) at address 0x4000_F000. Only some of the BME operations can be accomplished referencing GPIO at address 0x400F_F000.

Chapter 4
Memory Map

4.1 Introduction

This device contains various memories and memory-mapped peripherals which are located in a 4 GB memory space. This chapter describes the memory and peripheral locations within that memory space.

4.2 System memory map

The following table shows the high-level device memory map.

Table 4-1. System memory map

System 32-bit address range	Destination slave	Access
0x0000_0000–0x07FF_FFFF[1]	Program flash and read-only data (Includes exception vectors in first 196 bytes)	Cortex-M0+ core
0x0800_0000–0x1FFF_FBFF	Reserved	—
0x1FFF_FC00–0x1FFF_FFFF[2]	SRAM_L: Lower SRAM	Cortex-M0+ core
0x2000_0000–0x2000_0BFF[2]	SRAM_U: Upper SRAM	Cortex-M0+ core
0x2000_0C00–0x3FFF_FFFF	Reserved	–
0x4000_0000–0x4007_FFFF	AIPS Peripherals	Cortex-M0+ core
0x4008_0000–0x400F_EFFF	Reserved	–
0x400F_F000–0x400F_FFFF	General-purpose input/output (GPIO)	Cortex-M0+ core
0x4010_0000–0x43FF_FFFF	Reserved	–
0x4400_0000–0x5FFF_FFFF	Bit Manipulation Engine (BME) access to AIPS Peripherals for slots 0-127[3]	Cortex-M0+ core
0x6000_0000–0xDFFF_FFFF	Reserved	–
0xE000_0000–0xE00F_FFFF	Private Peripherals	Cortex-M0+ core
0xE010_0000–0xEFFF_FFFF	Reserved	–
0xF000_0000–0xF000_0FFF	Micro Trace Buffer (MTB) registers	Cortex-M0+ core
0xF000_1000–0xF000_1FFF	MTB Data Watchpoint and Trace (MTBDWT) registers	Cortex-M0+ core

Table continues on the next page...

Table 4-1. System memory map (continued)

System 32-bit address range	Destination slave	Access
0xF000_2000–0xF000_2FFF	ROM table	Cortex-M0+ core
0xF000_3000–0xF000_3FFF	Miscellaneous Control Module (MCM)	Cortex-M0+ core
0xF000_4000–0xF7FF_FFFF	Reserved	–
0xF800_0000–0xFFFF_FFFF	IOPORT: GPIO (single cycle)	Cortex-M0+ core

1. The program flash always begins at 0x0000_0000 but the end of implemented flash varies depending on the amount of flash implemented for a particular device. See Flash memory sizes for details.
2. This range varies depending on SRAM sizes. See SRAM ranges for details.
3. Includes BME operations to GPIO at slot 15 (based at 0x4000_F000).

4.3 Flash memory map

The flash memory and the flash registers are located at different base addresses as shown in the following figure. The base address for each is specified in System memory map.

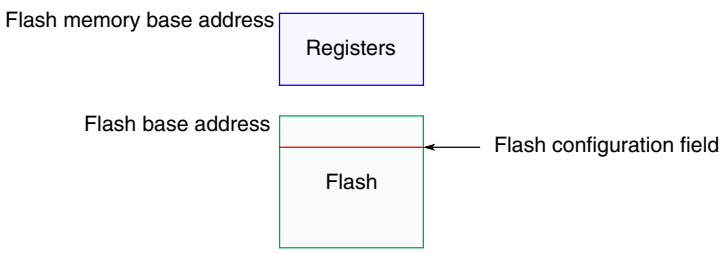

Figure 4-1. Flash memory map

The on-chip flash memory is implemented in a portion of the allocated Flash range to form a contiguous block in the memory map beginning at address 0x0000_0000. See Flash and EEPROM memory sizes for details of supported ranges.

Access to the flash memory ranges outside the amount of flash on the device causes the bus cycle to be terminated with an error followed by the appropriate response in the requesting bus master.

4.3.1 Alternate non-volatile IRC user trim description

The following non-volatile locations (4 bytes) are reserved for custom IRC user trim supported by some development tools. An alternate IRC trim to the factory loaded trim can be stored at this location. To override the factory trim, the user software must load new values into the MCG trim registers.

Non-volatile byte address	Alternate IRC Trim Value
0x0000_03FC	Reserved
0x0000_03FD	Reserved
0x0000_03FE (bit 0)	SCFTRIM
0x0000_03FE (bit 4:1)	FCTRIM
0x0000_03FE (bit 6)	FCFTRIM
0x0000_03FF	SCTRIM

4.4 SRAM memory map

The on-chip RAM is split between SRAM_L and SRAM_U. The RAM is also implemented such that the SRAM_L and SRAM_U ranges form a contiguous block in the memory map. See SRAM ranges for details.

Access to the SRAM_L and SRAM_U memory ranges outside the amount of RAM on the device causes the bus cycle to be terminated with an error followed by the appropriate response in the requesting bus master.

4.5 Bit Manipulation Engine

The Bit Manipulation Engine (BME) provides hardware support for atomic read-modify-write memory operations to the peripheral address space. By combining the basic load and store instruction support in the Cortex-M instruction set architecture with the concept of decorated storage provided by the BME, the resulting implementation provides a robust and efficient read-modify-write capability to this class of ultra low-end microcontrollers. See the Bit Manipulation Engine Block Guide (BME) for a detailed description of BME functionality.

4.6 Peripheral bridge (AIPS-Lite) memory map

The peripheral memory map is accessible via one slave port on the crossbar in the 0x4000_0000–0x400F_FFFF region. The device implements one peripheral bridge that defines a 1024 KB address space.

The three regions associated with this space are:

- A 128 KB region, partitioned as 32 spaces, each 4 KB in size and reserved for on-platform peripheral devices. The AIPS controller generates unique module enables for all 32 spaces.

- A 384 KB region, partitioned as 96 spaces, each 4 KB in size and reserved for off-platform modules. The AIPS controller generates unique module enables for all 96 spaces.
- The last slot is a 4 KB region beginning at 0x400F_F000 for accessing the GPIO module. The GPIO slot (slot 128) is an alias of slot 15. This block is also directly interfaced to the core and provides direct access without incurring wait states associated with accesses via the AIPS controller.

Modules that are disabled via their clock gate control bits in the SIM registers disable the associated AIPS slots. Access to any address within an unimplemented or disabled peripheral bridge slot results in a transfer error termination.

For programming model accesses via the peripheral bridges, there is generally only a small range within the 4 KB slots that is implemented. Accessing an address that is not implemented in the peripheral results in a transfer error termination.

4.6.1 Read-after-write sequence and required serialization of memory operations

In some situations, a write to a peripheral must be completed fully before a subsequent action can occur. Examples of such situations include:

- Exiting an interrupt service routine (ISR)
- Changing a mode
- Configuring a function

In these situations, the application software must perform a read-after-write sequence to guarantee the required serialization of the memory operations:

1. Write the peripheral register.
2. Read the written peripheral register to verify the write.
3. Continue with subsequent operations.

4.6.2 Peripheral bridge (AIPS-Lite) memory map

Table 4-2. Peripheral bridge 0 slot assignments

System 32-bit base address	Slot number	Module
0x4000_0000	0	—
0x4000_1000	1	—
0x4000_2000	2	—
0x4000_3000	3	—

Table continues on the next page...

Table 4-2. Peripheral bridge 0 slot assignments (continued)

System 32-bit base address	Slot number	Module
0x4000_4000	4	—
0x4000_5000	5	—
0x4000_6000	6	—
0x4000_7000	7	—
0x4000_8000	8	—
0x4000_9000	9	—
0x4000_A000	10	—
0x4000_B000	11	—
0x4000_C000	12	—
0x4000_D000	13	—
0x4000_E000	14	—
0x4000_F000	15	GPIO controller (aliased to 0x400F_F000)
0x4001_0000	16	—
0x4001_1000	17	—
0x4001_2000	18	—
0x4001_3000	19	—
0x4001_4000	20	—
0x4001_5000	21	—
0x4001_6000	22	—
0x4001_7000	23	—
0x4001_8000	24	—
0x4001_9000	25	—
0x4001_A000	26	—
0x4001_B000	27	—
0x4001_C000	28	—
0x4001_D000	29	—
0x4001_E000	30	—
0x4001_F000	31	—
0x4002_0000	32	Flash memory
0x4002_1000	33	—
0x4002_2000	34	—
0x4002_3000	35	—
0x4002_4000	36	—
0x4002_5000	37	—
0x4002_6000	38	—
0x4002_7000	39	—
0x4002_8000	40	—
0x4002_9000	41	—
0x4002_A000	42	—

Table continues on the next page...

Table 4-2. Peripheral bridge 0 slot assignments (continued)

System 32-bit base address	Slot number	Module
0x4002_B000	43	—
0x4002_C000	44	—
0x4002_D000	45	—
0x4002_E000	46	—
0x4002_F000	47	—
0x4003_0000	48	—
0x4003_1000	49	—
0x4003_2000	50	—
0x4003_3000	51	—
0x4003_4000	52	—
0x4003_5000	53	—
0x4003_6000	54	—
0x4003_7000	55	—
0x4003_8000	56	Timer'/PWM (TPM) 0
0x4003_9000	57	Timer'/PWM (TPM) 1
0x4003_A000	58	—
0x4003_B000	59	Analog-to-digital converter (ADC) 0
0x4003_C000	60	—
0x4003_D000	61	—
0x4003_E000	62	—
0x4003_F000	63	—
0x4004_0000	64	Low-power timer (LPTMR)
0x4004_1000	65	—
0x4004_2000	66	—
0x4004_3000	67	—
0x4004_4000	68	—
0x4004_5000	69	—
0x4004_6000	70	—
0x4004_7000	71	SIM low-power logic
0x4004_8000	72	System integration module (SIM)
0x4004_9000	73	Port A multiplexing control
0x4004_A000	74	Port B multiplexing control
0x4004_B000	75	—
0x4004_C000	76	—
0x4004_D000	77	—
0x4004_E000	78	—
0x4004_F000	79	—
0x4005_0000	80	—
0x4005_1000	81	—

Table continues on the next page...

Table 4-2. Peripheral bridge 0 slot assignments (continued)

System 32-bit base address	Slot number	Module
0x4005_2000	82	—
0x4005_3000	83	—
0x4005_4000	84	
0x4005_5000	85	—
0x4005_6000	86	—
0x4005_7000	87	—
0x4005_8000	88	—
0x4005_9000	89	—
0x4005_A000	90	—
0x4005_B000	91	—
0x4005_C000	92	—
0x4005_D000	93	—
0x4005_E000	94	—
0x4005_F000	95	—
0x4006_0000	96	—
0x4006_1000	97	—
0x4006_2000	98	—
0x4006_3000	99	—
0x4006_4000	100	Multi-purpose clock generator (MCG)
0x4006_5000	101	System oscillator (OSC)
0x4006_6000	102	I^2C 0
0x4006_7000	103	I^2C 1
0x4006_8000	104	—
0x4006_9000	105	—
0x4006_A000	106	UART 0
0x4006_B000	107	—
0x4006_C000	108	—
0x4006_D000	109	—
0x4006_E000	110	—
0x4006_F000	111	—
0x4007_0000	112	—
0x4007_1000	113	—
0x4007_2000	114	—
0x4007_3000	115	Analog comparator (CMP) / 6-bit digital-to-analog converter (DAC)
0x4007_4000	116	—
0x4007_5000	117	—
0x4007_6000	118	SPI 0
0x4007_7000	119	—
0x4007_8000	120	—

Table continues on the next page...

Table 4-2. Peripheral bridge 0 slot assignments (continued)

System 32-bit base address	Slot number	Module
0x4007_9000	121	—
0x4007_A000	122	—
0x4007_B000	123	—
0x4007_C000	124	—
0x4007_D000	125	Power management controller (PMC)
0x4007_E000	126	System mode controller (SMC)
0x4007_F000	127	Reset control module (RCM)
0x400F_F000	128	GPIO controller

4.6.3 Modules restricted access in user mode

In user mode, for MCG, RCM, SIM (slot 71 and 72), SMC, and PMC, reads are allowed, but writes are blocked and generate bus error.

4.7 Private Peripheral Bus (PPB) memory map

The PPB is part of the defined ARM bus architecture and provides access to select processor-local modules. These resources are only accessible from the core; other system masters do not have access to them.

Table 4-3. PPB memory map

System 32-bit Address Range	Resource	Additional Range Detail	Resource
0xE000_0000–0xE000_DFFF	Reserved		
0xE000_E000–0xE000_EFFF	System Control Space (SCS)	0xE000_E000–0xE000_E00F	Reserved
		0xE000_E010–0xE000_E0FF	SysTick
		0xE000_E100–0xE000_ECFF	NVIC
		0xE000_ED00–0xE000_ED8F	System Control Block
		0xE000_ED90–0xE000_EDEF	Reserved
		0xE000_EDF0–0xE000_EEFF	Debug
		0xE000_EF00–0xE000_EFFF	Reserved
0xE000_F000–0xE00F_EFFF	Reserved		
0xE00F_F000–0xE00F_FFFF	Core ROM Space (CRS)		

Chapter 5
Clock Distribution

5.1 Introduction

This chapter presents the clock architecture for the device, the overview of the clocks and includes a terminology section.

The Cortex M0+ resides within a synchronous core platform, where the processor and bus masters, flash memory, and peripheral clocks can be configured independently. The clock distribution figure shows how clocks from the MCG and XOSC modules are distributed to the microcontroller's other function units. Some modules in the microcontroller have selectable clock input.

5.2 Programming model

The selection and multiplexing of system clock sources is controlled and programmed via the MCG module. The setting of clock dividers and module clock gating for the system are programmed via the SIM module. Refer to the MCG and SIM" sections for detailed register and bit descriptions.

5.3 High-level device clocking diagram

The following system oscillator, MCG, and SIM module registers control the multiplexers, dividers, and clock gates shown in the following figure:

	OSC	MCG	SIM
Multiplexers	MCG_C*x*	MCG_C*x*	SIM_SOPT1, SIM_SOPT2
Dividers	—	MCG_C*x*	SIM_CLKDIV*x*
Clock gates	OSC_CR	MCG_C1	SIM_SCGC*x*

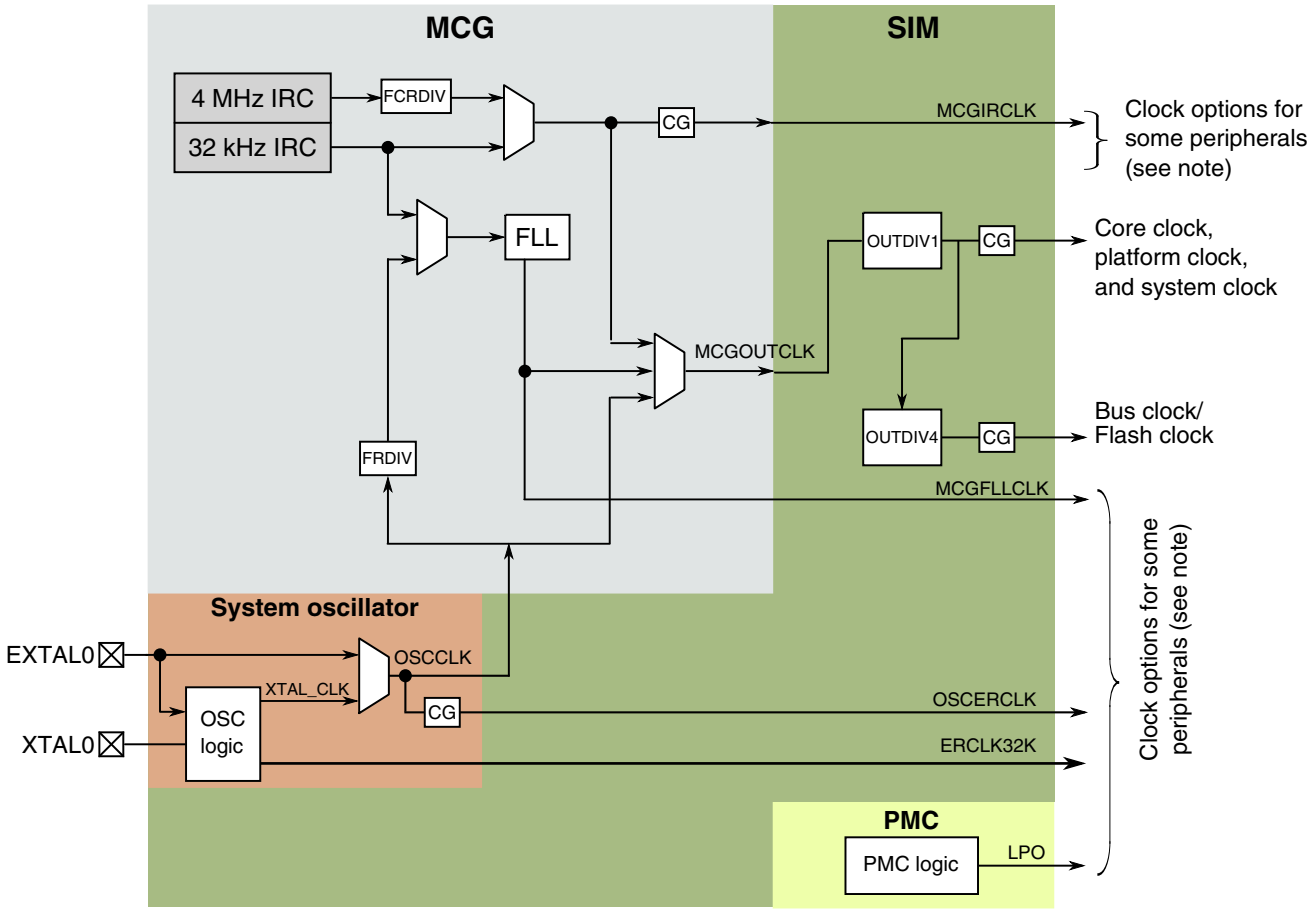

CG — Clock gate
Note: See subsequent sections for details on where these clocks are used.

Figure 5-1. Clocking diagram

5.4 Clock definitions

The following table describes the clocks in the previous block diagram.

Clock name	Description
Core clock	MCGOUTCLK divided by OUTDIV1 Clocks the ARM Cortex-M0+ core.
Platform clock	MCGOUTCLK divided by OUTDIV1 Clocks the crossbar switch and NVIC.
System clock	MCGOUTCLK divided by OUTDIV1 Clocks the bus masters directly .
Bus clock	System clock divided by OUTDIV4.

Table continues on the next page...

Clock name	Description
	Clocks the bus slaves and peripherals.
Flash clock	Flash memory clock On this device, it is the same as Bus clock.
MCGIRCLK	MCG output of the slow or fast internal reference clock
MCGOUTCLK	MCG output of either IRC, MCGFLLCLK or MCG's external reference clock that sources the core, system, bus, and flash clock.
MCGFLLCLK	MCG output of the FLL MCGFLLCLK may clock some modules. In addition, this clock is used for UART0 and TPM modules.
OSCCLK	System oscillator output of the internal oscillator or sourced directly from EXTAL. Used as MCG external reference clock.
OSCERCLK	System oscillator output sourced from OSCCLK that may clock some on-chip modules
ERCLK32K	Clock source for some modules that is chosen as OSC32KCLK
LPO	PMC 1 kHz output

5.4.1 Device clock summary

The following table provides more information regarding the on-chip clocks.

Table 5-1. Clock summary

Clock name	Run mode clock frequency	VLPR mode clock frequency	Clock source	Clock is disabled when…
MCGOUTCLK	Up to 48 MHz	Up to 4 MHz	MCG	In all stop modes except for partial stop modes.
MCGFLLCLK	Up to 48 MHz	N/A	MCG	MCG clock controls are not enabled and in all stop modes
Core clock	Up to 48 MHz	Up to 4 MHz	MCGOUTCLK clock divider	In all wait and stop modes
Platform clock	Up to 48 MHz	Up to 4 MHz	MCGOUTCLK clock divider	In all stop modes
System clock	Up to 48 MHz	Up to 4 MHz	MCGOUTCLK clock divider	In all stop modes and Compute Operation
Bus clock	Up to 24 MHz	Up to 1 MHz [1]	MCGOUTCLK clock divider	In all stop modes except for partial STOP2 mode, and Compute Operation
SWD Clock	Up to 24 MHz	Up to 1 MHz	SWD_CLK pin	In all stop modes

Table continues on the next page...

Table 5-1. Clock summary (continued)

Clock name	Run mode clock frequency	VLPR mode clock frequency	Clock source	Clock is disabled when…
Flash clock	Up to 24 MHz	Up to 1 MHz in BLPE Up to 800 kHz in BLPI	MCGOUTCLK clock divider	In all stop modes except for partial STOP2 mode
Internal reference (MCGIRCLK)	30–40 kHz Slow IRC or 4 MHz Fast IRC	4 MHz Fast IRC only	MCG	MCG_C1[IRCLKEN] cleared, Stop/VLPS mode and MCG_C1[IREFSTEN] cleared, or VLLS mode
External reference (OSCERCLK)	Up to 48 MHz (bypass), 30–40 kHz	Up to 16 MHz (bypass), 30–40 kHz	System OSC	System OSC's OSC_CR[ERCLKEN] cleared, or Stop mode and OSC_CR[EREFSTEN] cleared or VLLS0 and oscillator not in external clock mode.
External reference 32kHz (ERCLK32K)	30–40 kHz	30–40 kHz	System OSC	System OSC's OSC_CR[ERCLKEN] cleared or VLLS0 and oscillator not in external clock mode.
LPO	1 kHz	1 kHz	PMC	in VLLS0
TPM clock	Up to 48 MHz	Up to 8 MHz	MCGIRCLK, MCGFLLCLK, or OSCERCLK	SIM_SOPT2[TPMSRC]=00 or selected clock source disabled.
UART0 clock	Up to 48 MHz	Up to 8 MHz	MCGIRCLK, MCGFLLCLK, or OSCERCLK	SIM_SOPT2[UART0SRC]=00 or selected clock source disabled.

1. If in BLPI mode, where clocking is derived from the fast internal reference clock, the Bus clock and flash clock frequency needs to be limited to 800 kHz if executing from flash.

5.5 Internal clocking requirements

The clock dividers are programmed via the CLKDIV registers of the SIM module. The following requirements must be met when configuring the clocks for this device:

- The core, platform, and system clock are programmable from a divide-by-1 through divide-by-16 setting. The core, platform, and system clock frequencies must be 48 MHz or slower.
- The frequency of bus clock and flash clock is divided by the system clock and is programmable from a divide-by-1 through divide-by-8 setting. The bus clock and flash clock must be programmed to 24 MHz or slower.

The following is a common clock configuration for this device:

Clock	Frequency
Core clock	48 MHz
Platform clock	48 MHz
System clock	48 MHz
Bus clock	24 MHz
Flash clock	24 MHz

5.5.1 Clock divider values after reset

Each clock divider is programmed via the CLKDIV1 registers of the SIM module. Two bits in the flash memory's FTFA_FOPT register control the reset value of the core clock, system clock, bus clock, and flash clock dividers as shown in the table given below:

FTFA_FOPT [4,0]	Core/system clock	Bus/Flash clock	Description
00	0x7 (divide by 8)	0x1 (divide by 2)	Low power boot
01	0x3 (divide by 4)	0x1 (divide by 2)	Low power boot
10	0x1 (divide by 2)	0x1 (divide by 2)	Low power boot
11	0x0 (divide by 1)	0x1 (divide by 2)	Fast clock boot

This gives the user flexibility in selecting between a lower frequency, low-power boot option and higher frequency, higher power during and after reset.

The flash erased state defaults to fast clocking mode, since these bits reside in flash, which is logic 1 in the flash erased state. To enable a lower power boot option, program the appropriate bits in FTFA_FOPT. During the reset sequence, if either of the control bits is cleared, the system is in a slower clock configuration. Upon any system reset, the clock dividers return to this configurable reset state.

5.5.2 VLPR mode clocking

The clock dividers cannot be changed while in VLPR mode. These dividers must be programmed prior to entering VLPR mode to guarantee operation. Maximum frequency limitations for VLPR mode is as follows :

- the core/system clocks are less than or equal to 4 MHz, and
- the bus and flash clocks are less than or equal to 1 MHz

NOTE

When the MCG is in BLPI and clocking is derived from the Fast IRC, the clock divider controls (MCG_SC[FCRDIV], SIM_CLKDIV1[OUTDIV1], and SIM_CLKDIV1[OUTDIV4]) must be programmed such that the resulting flash clock nominal frequency is 800 kHz or less. In this case, one example of correct configuration is MCG_SC[FCRDIV] = 000b, SIM_CLKDIV1[OUTDIV1] = 0000b, and SIM_CLKDIV1[OUTDIV4] = 100b, resulting in a divide-by-5 setting.

5.6 Clock gating

The clock to each module can be individually gated on and off using bits of the SCGC*x* registers of the SIM module. These bits are cleared after any reset, which disables the clock to the corresponding module to conserve power. Prior to initializing a module, set the corresponding bit in the SCGC*x* register to enable the clock. Before turning off the clock, make sure to disable the module.

Any bus access to a peripheral that has its clock disabled generates an error termination.

5.7 Module clocks

The following table summarizes the clocks associated with each module.

Table 5-2. Module clocks

Module	Bus interface clock	Internal clocks	I/O interface clocks
Core modules			
ARM Cortex-M0+ core	Platform clock	Core clock	—
NVIC	Platform clock	—	—
DAP	Platform clock	—	SWD_CLK

Table continues on the next page...

Table 5-2. Module clocks (continued)

Module	Bus interface clock	Internal clocks	I/O interface clocks
System modules			
Port control	Bus clock	—	—
Crossbar Switch	Platform clock	—	—
Peripheral bridges	System clock	Bus clock	—
PMC, SIM, RCM	Bus clock	LPO	—
Mode controller	Bus clock	—	—
MCM	Platform clock	—	—
Watchdog timer	Bus clock	LPO	—
Clocks			
MCG	Bus clock	MCGOUTCLK, MCGFLLCLK, MCGIRCLK, OSCERCLK	—
OSC	Bus clock	OSCERCLK	—
Memory and memory interfaces			
Flash Controller	Platform clock	Flash clock	—
Flash memory	Flash clock	—	—
Analog			
ADC	Bus clock	OSCERCLK	—
CMP	Bus clock	—	—
Timers			
TPM	Bus clock	TPM clock	TPM_CLKIN0, TPM_CLKIN1
LPTMR	Bus clock	LPO, OSCERCLK, MCGIRCLK, ERCLK32K	—
Communication interfaces			
SPI0	Bus clock	—	SPI0_SCK
I^2C0	Bus clock	—	I2C0_SCL
I^2C1	System clock	—	I2C1_SCL
UART0	Bus clock	UART0 clock	—
Human-machine interfaces			
GPIO	Platform clock	—	—

5.7.1 PMC 1-kHz LPO clock

The Power Management Controller (PMC) generates a 1-kHz clock that is enabled in all modes of operation, including all low-power modes except VLLS0. This 1-kHz source is commonly referred to as LPO clock or 1-kHz LPO clock.

5.7.2 COP clocking

The COP may be clocked from two clock sources as shown in the following figure.

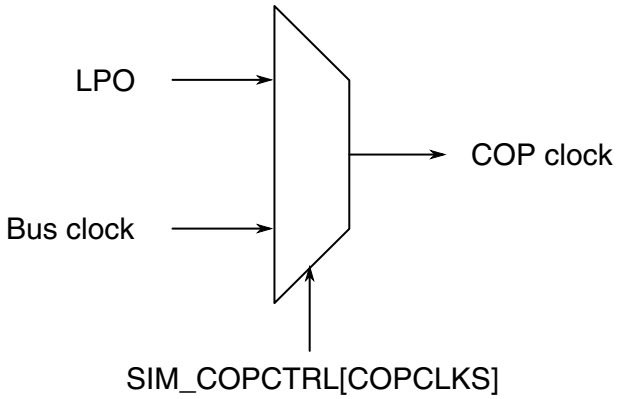

Figure 5-2. COP clock generation

5.7.3 LPTMR clocking

The prescaler and glitch filters in each of the LPTMR*x* modules can be clocked as shown in the following figure.

NOTE

The chosen clock must remain enabled if the LPTMR*x* is to continue operating in all required low-power modes.

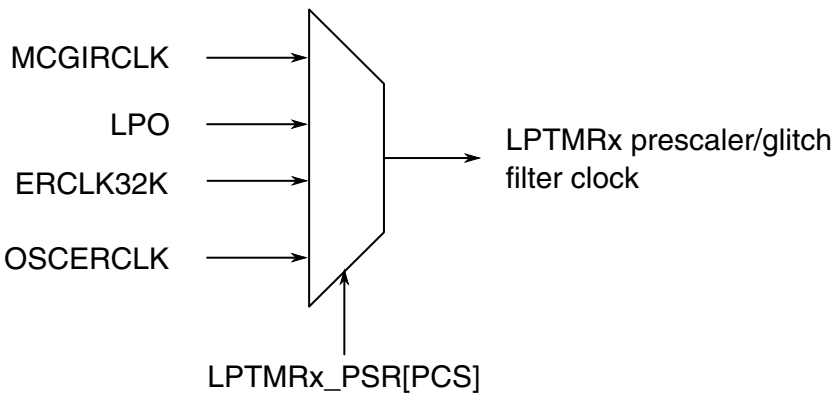

Figure 5-3. LPTMRx prescaler/glitch filter clock generation

5.7.4 TPM clocking

The counter for the TPM modules has a selectable clock as shown in the following figure.

NOTE

The chosen clock must remain enabled if the TPM*x* is to continue operating in all required low-power modes.

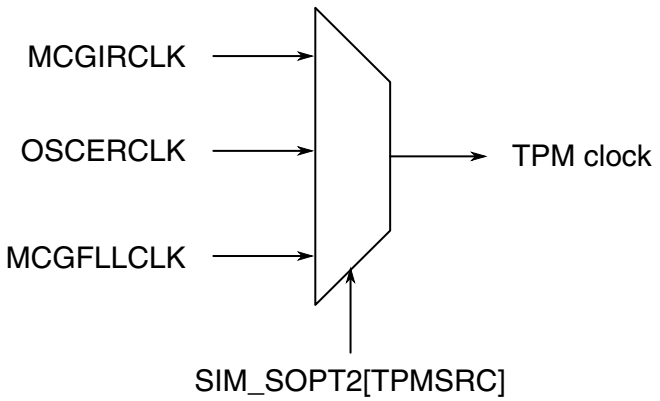

Figure 5-4. TPM clock generation

5.7.5 UART clocking

The UART0 module has a selectable clock as shown in the following figure.

NOTE

The chosen clock must remain enabled if the UART0 is to continue operating in all required low-power modes.

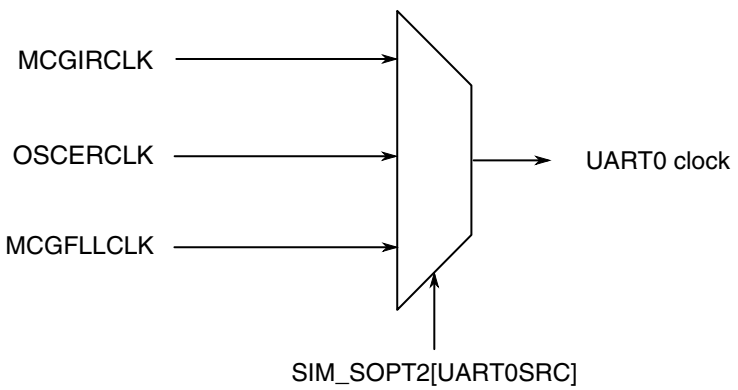

Figure 5-5. UART0 clock generation

Chapter 6
Reset and Boot

6.1 Introduction

The following reset sources are supported in this MCU:

Table 6-1. Reset sources

Reset sources	Description
POR reset	• Power-on reset (POR)
System resets	• External pin reset (PIN) • Low-voltage detect (LVD) • Computer operating properly (COP) watchdog reset • Multipurpose clock generator loss of clock (LOC) reset • Stop mode acknowledge error (SACKERR) • Software reset (SW) • Lockup reset (LOCKUP) • MDM DAP system reset
Debug reset	• Debug reset

Each of the system reset sources has an associated bit in the System Reset Status (SRS) registers. See the Reset Control Module for register details.

The MCU can exit and reset in functional mode where the CPU is executing code (default) or the CPU is in a debug halted state. There are several boot options that can be configured. See Boot information for more details.

6.2 Reset

This section discusses basic reset mechanisms and sources. Some modules that cause resets can be configured to cause interrupts instead. Consult the individual peripheral chapters for more information.

6.2.1 Power-on reset (POR)

When power is initially applied to the MCU or when the supply voltage drops below the power-on reset re-arm voltage level (V_{POR}), the POR circuit causes a POR reset condition.

As the supply voltage rises, the LVD circuit holds the MCU in reset until the supply has risen above the LVD low threshold (V_{LVDL}). The POR and LVD fields in the Reset Status Register are set following a POR.

6.2.2 System reset sources

Resetting the MCU provides a way to start processing from a known set of initial conditions. System reset begins with the on-chip regulator in full regulation and system clocking generation from an internal reference. When the processor exits reset, it performs the following:

- Reads the start SP (SP_main) from vector-table offset 0
- Reads the start PC from vector-table offset 4
- LR is set to 0xFFFF_FFFF.

The on-chip peripheral modules are disabled and the non-analog I/O pins are initially configured as disabled. The pins with analog functions assigned to them default to their analog function after reset.

During and following a reset, the SWD pins have their associated input pins configured as:

- SWD_CLK in pulldown (PD)
- SWD_DIO in pullup (PU)

6.2.2.1 External pin reset ($\overline{\text{RESET_b}}$)

This pin is open drain and has an internal pullup device. Asserting $\overline{\text{RESET_b}}$ wakes the device from any mode.

The $\overline{\text{RESET_b}}$ pin can be disabled by programming RESET_PIN_CFG option bit to 0. When this option is selected, there could be a short period of contention during a POR ramp where the device drives the pin-out low prior to establishing the setting of this option and releasing the reset function on the pin.

6.2.2.1.1 $\overline{\text{RESET_b}}$ pin filter

The $\overline{\text{RESET_b}}$ pin filter supports filtering from both the 1 kHz LPO clock and the bus clock. The RCM_RPFC[RSTFLTSS], RCM_RPFC[RSTFLTSRW], and RCM_RPFW[RSTFLTSEL] fields set control this functionality; see the RCM chapter. The filters are asynchronously reset by Chip POR. The reset value for each filter assumes the $\overline{\text{RESET_b}}$ pin is negated.

For all stop modes where LPO clock is still active (Stop, VLPS, VLLS3, and VLLS1), the only filtering option is the LPO-based digital filter. The filtering logic either switches to bypass operation or has continued filtering operation depending on the filtering mode selected. When entering VLLS0, the $\overline{\text{RESET_b}}$ pin filter is disabled and bypassed.

The LPO filter has a fixed filter value of 3. Due to a synchronizer on the input data, there is also some associated latency (2 cycles). As a result, 5 cycles are required to complete a transition from low to high or high to low.

6.2.2.2 Low-voltage detect (LVD)

The chip includes a system for managing low-voltage conditions to protect memory contents and control MCU system states during supply voltage variations. The system consists of a power-on reset (POR) circuit and an LVD circuit with a user-selectable trip voltage. The LVD system is always enabled in Normal Run, Wait, or Stop mode. The LVD system is disabled when entering VLPx or VLLSx modes.

The LVD can be configured to generate a reset upon detection of a low-voltage condition by setting PMC_LVDSC1[LVDRE] to 1. The low-voltage detection threshold is determined by PMC_LVDSC1[LVDV]. After an LVD reset has occurred, the LVD system holds the MCU in reset until the supply voltage has risen above the low voltage detection threshold. RCM_SRS0[LVD] is set following either an LVD reset or POR.

6.2.2.3 Computer operating properly (COP) watchdog timer

The computer operating properly (COP) watchdog timer (WDOG) monitors the operation of the system by expecting periodic communication from the software. This communication is generally known as servicing (or refreshing) the COP watchdog. If this periodic refreshing does not occur, the watchdog issues a system reset. The COP reset causes RCM_SRS0[WDOG] to set.

6.2.2.4 Multipurpose clock generator loss-of-clock (LOC)

The MCG module supports an external reference clock.

If MCG_C6[CME] is set, the clock monitor is enabled. If the external reference falls below f_{loc_low} or f_{loc_high}, as controlled by MCG_C2[RANGE], the MCU resets. RCM_SRS0[LOC] is set to indicate this reset source.

NOTE

To prevent unexpected loss of clock reset events, all clock monitors must be disabled before entering any low-power modes, including VLPR and VLPW.

6.2.2.5 Stop mode acknowledge error (SACKERR)

This reset is generated if the core attempts to enter Stop mode or Compute Operation, but not all modules acknowledge Stop mode within 1025 cycles of the 1 kHz LPO clock.

A module might not acknowledge the entry to Stop mode if an error condition occurs. The error can be caused by a failure of an external clock input to a module.

6.2.2.6 Software reset (SW)

The SYSRESETREQ field in the NVIC Application Interrupt and Reset Control register can be set to force a software reset on the device. (See ARM's NVIC documentation for the full description of the register fields, especially the VECTKEY field requirements.) Setting SYSRESETREQ generates a software reset request. This reset forces a system reset of all major components except for the debug module. A software reset causes RCM_SRS1[SW] to set.

6.2.2.7 Lockup reset (LOCKUP)

The LOCKUP gives immediate indication of seriously errant kernel software. This is the result of the core being locked because of an unrecoverable exception following the activation of the processor’s built in system state protection hardware.

The LOCKUP condition causes a system reset and also causes RCM_SRS1[LOCKUP] to set.

6.2.2.8 MDM-AP system reset request

Set the System Reset Request field in the MDM-AP control register to initiate a system reset. This is the primary method for resets via the SWD interface. The system reset is held until this field is cleared.

Set the Core Hold Reset field in the MDM-AP control register to hold the core in reset as the rest of the chip comes out of system reset.

6.2.3 MCU resets

A variety of resets are generated by the MCU to reset different modules.

6.2.3.1 POR Only

The POR Only reset asserts on the POR reset source only. It resets the PMC.

The POR Only reset also causes all other reset types to occur.

6.2.3.2 Chip POR not VLLS

The Chip POR not VLLS reset asserts on POR and LVD reset sources. It resets parts of the SMC and SIM. It also resets the LPTMR.

The Chip POR not VLLS reset also causes these resets to occur: Chip POR, Chip Reset not VLLS, and Chip Reset (including Early Chip Reset).

6.2.3.3 Chip POR

The Chip POR asserts on POR, LVD, and VLLS Wakeup reset sources. It resets the Reset Pin Filter registers and parts of the SIM and MCG.

The Chip POR also causes the Chip Reset (including Early Chip Reset) to occur.

6.2.3.4 Chip Reset not VLLS

The Chip Reset not VLLS reset asserts on all reset sources except a VLLS Wakeup that does not occur via the $\overline{\text{RESET_b}}$ pin. It resets parts of the SMC and other modules that remain powered during VLLS mode.

The Chip Reset not VLLS reset also causes the Chip Reset (including Early Chip Reset) to occur.

6.2.3.5 Early Chip Reset

The Early Chip Reset asserts on all reset sources. It resets only the flash memory module. It negates before flash memory initialization begins ("earlier" than when the Chip Reset negates).

6.2.3.6 Chip Reset

Chip Reset asserts on all reset sources and only negates after flash initialization has completed and the $\overline{\text{RESET_b}}$ pin has also negated. It resets the remaining modules (the modules not reset by other reset types).

6.2.4 $\overline{\text{RESET_b}}$ pin

For all reset sources except a VLLS Wakeup that does not occur via the $\overline{\text{RESET_b}}$ pin, the $\overline{\text{RESET_b}}$ pin is driven low by the MCU for at least 128 bus clock cycles and until flash initialization has completed.

After flash initialization has completed, the $\overline{\text{RESET_b}}$ pin is released, and the internal Chip Reset negates after the $\overline{\text{RESET_b}}$ pin is pulled high. Keeping the $\overline{\text{RESET_b}}$ pin asserted externally delays the negation of the internal Chip Reset.

The $\overline{\text{RESET_b}}$ pin can be disabled by programming FTFA_FOPT[RESET_PIN_CFG] option bit to 0 (See Table 6-2). When this option is selected, there could be a short period of contention during a POR ramp where the device drives the pinout low prior to establishing the setting of this option and releasing the RESET function on the pin.

6.2.5 Debug resets

The following sections detail the debug resets available on the device.

6.2.5.1 Resetting the Debug subsystem

Use the CDBGRSTREQ field within the DP CTRL/STAT register to reset the debug modules. However, as explained below, using the CDBGRSTREQ field does not reset all debug-related registers.

CDBGRSTREQ resets the debug-related registers within the following modules:

- SW-DP
- AHB-AP
- MDM-AP (MDM control and status registers)

CDBGRSTREQ does not reset the debug-related registers within the following modules:

- CM0+ core (core debug registers: DHCSR, DCRSR, DCRDR, DEMCR)
- BPU
- DWT
- NVIC
- Crossbar bus switch[1]
- AHB-AP[1]
- Private peripheral bus[1]

6.3 Boot

This section describes the boot sequence, including sources and options.

Some configuration information such as clock trim values stored in factory programmed flash locations is autoloaded.

6.3.1 Boot sources

The CM0+ core adds support for a programmable Vector Table Offset Register (VTOR) to relocate the exception vector table. This device supports booting from internal flash and RAM.

This device supports booting from internal flash with the reset vectors located at addresses 0x0 (initial SP_main), 0x4 (initial PC), and RAM with relocating the exception vector table to RAM.

1. CDBGRSTREQ does not affect AHB resources so that debug resources on the private peripheral bus are available during System Reset.

6.3.2 FOPT boot options

The Flash Option (FOPT) register in the Flash Memory module (FTFA_FOPT) allows the user to customize the operation of the MCU at boot time. The register contains read-only bits that are loaded from the NVM's option byte in the flash configuration field. The default setting for all values in the FTFA_FOPT register is logic 1 since it is copied from the option byte residing in flash, which has all bits as logic 1 in the flash erased state. To configure for alternate settings, program the appropriate bits in the NVM option byte. The new settings will take effect on subsequent POR, VLLSx recoveries, and any system reset. For more details on programming the option byte, see the flash memory chapter.

The MCU uses the FTFA_FOPT register bits to configure the device at reset as shown in the following table.

Table 6-2. Flash Option Register (FTFA_FOPT) bit definitions

Bit Num	Field	Value	Definition
7-6	Reserved	Reserved for future expansion.	
5	FAST_INIT	Selects initialization speed on POR, VLLSx, and any system reset .	
		0	Slower initialization: The flash initialization will be slower with the benefit of reduced average current during this time. The duration of the recovery will be controlled by the clock divider selection determined by the LPBOOT setting.
		1	Fast Initialization: The flash has faster recoveries at the expense of higher current during these times.
3	RESET_PIN_CFG	Enables/disables control for the RESET pin.	
		0	$\overline{\text{RESET_b}}$ pin is disabled following a POR and cannot be enabled as reset function. When this option is selected, there could be a short period of contention during a POR ramp where the device drives the pinout low prior to establishing the setting of this option and releasing the reset function on the pin. This bit is preserved through system resets and low-power modes. When $\overline{\text{RESET_b}}$ pin function is disabled, it cannot be used as a source for low-power mode wake-up. **NOTE:** When the reset pin has been disabled and security has been enabled by means of the FSEC register, a mass erase can be performed only by setting both the Mass Erase and System Reset Request fields in the MDM-AP register.
		1	$\overline{\text{RESET_b}}$ pin is dedicated. The port is configured with pullup enabled, open drain, passive filter enabled.
2	NMI_DIS	Enables/disables control for the NMI function.	
		0	NMI interrupts are always blocked. The associated pin continues to default to $\overline{\text{NMI_b}}$ pin controls with internal pullup enabled. When $\overline{\text{NMI_b}}$ pin function is disabled, it cannot be used as a source for low-power mode wake-up.
		1	$\overline{\text{NMI_b}}$ pin/interrupts reset default to enabled.
1	Reserved	Reserved for future expansion.	

Table continues on the next page...

Table 6-2. Flash Option Register (FTFA_FOPT) bit definitions (continued)

Bit Num	Field	Value	Definition
4,0	LPBOOT	Controls the reset value of OUTDIV1 value in SIM_CLKDIV1 register. Larger divide value selections produce lower average power consumption during POR, VLLSx recoveries and reset sequencing and after reset exit. The recovery times are also extended if the FAST_INIT option is not selected.	
		00	Core and system clock divider (OUTDIV1) is 0x7 (divide by 8).
		01	Core and system clock divider (OUTDIV1) is 0x3 (divide by 4).
		10	Core and system clock divider (OUTDIV1) is 0x1 (divide by 2).
		11	Core and system clock divider (OUTDIV1) is 0x0 (divide by 1).

6.3.3 Boot sequence

At power up, the on-chip regulator holds the system in a POR state until the input supply exceeds the POR threshold. The system continues to be held in this static state until the internally regulated supplies have reached a safe operating voltage as determined by the LVD. The Reset Controller logic then controls a sequence to exit reset.

1. A system reset is held on internal logic, the $\overline{\text{RESET_b}}$ pin is driven out low, and the MCG is enabled in its default clocking mode.
2. Required clocks are enabled (system clock, flash clock, and any bus clocks that do not have clock gate control reset to disabled).
3. The system reset on internal logic continues to be held, but the Flash Controller is released from reset and begins initialization operation while the Reset Control logic continues to drive the $\overline{\text{RESET_b}}$ pin out low.
4. Early in reset sequencing, the NVM option byte is read and stored to the FOPT register of the Flash Memory module (FTFA_FOPT). If the bits associated with FTFA_FOPT[LPBOOT] are programmed for an alternate clock divider reset value, the system/core clock is switched to a slower clock speed. If FTFA_FOPT[FAST_INIT] is programmed clear, the flash initialization switches to slower clock resulting longer recovery times.
5. When flash Initialization completes, the $\overline{\text{RESET_b}}$ pin is released. If $\overline{\text{RESET_b}}$ continues to be asserted (an indication of a slow rise time on the $\overline{\text{RESET_b}}$ pin or external drive in low), the system continues to be held in reset. Once the $\overline{\text{RESET_b}}$ pin is detected high, the core clock is enabled and the system is released from reset.
6. When the system exits reset, the processor sets up the stack, program counter (PC), and link register (LR). The processor reads the start SP (SP_main) from vector-table offset 0. The core reads the start PC from vector-table offset 4. LR is set to

0xFFFF_FFFF. The next sequence of events depends on the $\overline{\text{NMI_b}}$ input and FTFA_FOPT[NMI_DIS] (See Table 6-2) :

- If the $\overline{\text{NMI_b}}$ input is high or the NMI function is disabled in the FOPT register, the CPU begins execution at the PC location.
- If the $\overline{\text{NMI_b}}$ input is low and the NMI function is enabled in the FOPT register, this results in an NMI interrupt. The processor executes an Exception Entry and reads the NMI interrupt handler address from vector-table offset 8. The CPU begins execution at the NMI interrupt handler.

Subsequent system resets follow this same reset flow.

Chapter 7
Power Management

7.1 Introduction

This chapter describes the various chip power modes and functionality of the individual modules in these modes.

7.2 Clocking modes

This section describes the various clocking modes supported on this device.

7.2.1 Partial Stop

Partial Stop is a clocking option that can be taken instead of entering Stop mode and is configured in the SMC Stop Control Register (SMC_STOPCTRL). The Stop mode is only partially entered, which leaves some additional functionality alive at the expense of higher power consumption. Partial Stop can be entered from either Run mode or VLP Run mode.

When configured for PSTOP2, only the core and system clocks are gated and the bus clock remains active. The bus masters and bus slaves clocked by the system clock enter Stop mode, but the bus slaves clocked by bus clock remain in Run (or VLP Run) mode. The clock generators in the MCG and the on-chip regulator in the PMC also remain in Run (or VLP Run) mode. Exit from PSTOP2 can be initiated by a reset, an asynchronous interrupt from a bus master or bus slave clocked by the system clock, or a synchronous interrupt from a bus slave clocked by the bus clock.

PSTOP2 is functionally similar to WAIT mode, but offers additional power savings through the gating of the System clock. All the bus masters are disabled.

When configured for PSTOP1, both the system clock and bus clock are gated. All bus masters and bus slaves enter Stop mode, but the clock generators in the MCG and the on-chip regulator in the PMC remain in Run (or VLP Run) mode. Exit from PSTOP1 can be initiated by a reset or an asynchronous interrupt from a bus master or bus slave.

PSTOP1 is functionally similar to Stop mode, but offers faster wake-up at the expense of higher power consumption. Another benefit is that it keeps all of the MCG clocks enabled, which can be useful for some of the asynchronous peripherals that can remain functional in Stop modes.

7.2.2 Compute Operation

Compute Operation is an execution or compute-only mode of operation that keeps the CPU enabled with full access to the SRAM and Flash read port, but places all other bus masters and bus slaves into their stop mode. Compute Operation can be enabled in either Run mode or VLP Run mode.

NOTE

Do not enter any Stop mode without first exiting Compute Operation.

Because Compute Operation reuses the Stop mode logic (including the staged entry with bus masters disabled before bus slaves), any bus master or bus slave that can remain functional in Stop mode also remains functional in Compute Operation, including generation of asynchronous interrupts requests. When enabling Compute Operation in Run mode, module functionality for bus masters and slaves is the equivalent of STOP mode. When enabling Compute Operation in VLP Run mode, module functionality for bus masters and slaves is the equivalent of VLPS mode. The MCG, PMC, SRAM, and Flash read port are not affected by Compute Operation, although the Flash register interface is disabled.

During Compute Operation, the AIPS peripheral space is disabled and attempted accesses generate bus errors. The private peripheral space remains accessible during Compute Operation, including the MCM, NVIC, IOPORT, and SysTick. Although access to the GPIO registers via the IOPORT is supported, the GPIO port data input registers do not return valid data since clocks are disabled to the Port Control and Interrupt modules. By writing to the GPIO port data output registers, it is possible to control those GPIO ports that are configured as output pins.

Compute Operation is controlled by the CPO register in the MCM (MCM_CPO), which is only accessible to the CPU. Setting or clearing MCM_CPO[CPOREQ] initiates entry or exit into Compute Operation. Compute Operation can also be configured to exit

automatically on detection of an interrupt, which is required in order to service most interrupts. Only the core system interrupts (exceptions, including NMI and SysTick) and any edge-sensitive interrupts can be serviced without exiting Compute Operation.

- When entering Compute Operation, the CPOACK status field in the CPO register of MCM module (MCM_CPO[CPOACK]) indicates when entry has completed.
- When exiting Compute Operation in Run mode, MCM_CPO[CPOACK] negates immediately.
- When exiting Compute Operation in VLP Run mode, the exit is delayed to allow the PMC to handle the change in power consumption. This delay means that MCM_CPO[CPOACK] is polled to determine when the AIPS peripheral space can be accessed without generating a bus error.

7.2.3 Peripheral Doze

Several peripherals support a Peripheral Doze mode, where a register bit can be used to disable the peripheral for the duration of a low-power mode. The flash memory can also be placed in a low-power state during Peripheral Doze via a register bit in the SIM.

Peripheral Doze is defined to include all of the modes of operation listed below.

- The CPU is in Wait mode.
- The CPU is in Stop mode, including the entry sequence.
- The CPU is in Compute Operation, including the entry sequence.

Peripheral Doze can therefore be used to disable selected bus masters or slaves for the duration of WAIT or VLPW mode. It can also be used to disable selected bus slaves immediately on entry into any stop mode (or Compute Operation), instead of waiting for the bus masters to acknowledge the entry as part of the stop entry sequence.

If the flash memory is not being accessed during WAIT and PSTOP modes, then the Flash Doze mode can be used to reduce power consumption, at the expense of a slightly longer wake-up when executing code and vectors from flash. It can also be used to reduce power consumption during Compute Operation when executing code and vectors from SRAM.

7.2.4 Clock gating

To conserve power, the clocks to most modules can be turned off using the SCGCx registers in the SIM module. The bits of these registers are cleared after any reset, which disables the clock to the corresponding module. Prior to initializing a module, set the

corresponding bit in the SCGCx register to enable the clock. Before turning off the clock, make sure to disable the module. For more details, see the Clock Distribution and SIM chapters.

7.3 Power modes

The Power Management Controller (PMC) provides multiple power options to allow the user to optimize power consumption for the level of functionality needed.

Depending on the stop requirements of the user application, a variety of stop modes are available that provide partial power-down or full power-down of certain logic and/or memory. I/O states are held in all modes of operation. The following table compares the various power modes available.

For each run mode, there is a corresponding Wait and Stop mode. Wait modes are similar to ARM Sleep modes. Stop modes (VLPS, STOP) are similar to ARM Sleep Deep mode. The Very Low Power Run (VLPR) operating mode can drastically reduce runtime power when the maximum bus frequency is not required to handle the application needs.

The three primary modes of operation are Run, Wait, and Stop. The WFI instruction invokes both Wait and Stop modes for the chip. The primary modes are augmented in a number of ways to provide lower power based on application needs.

Table 7-1. Chip power modes

Chip mode	Description	Core mode	Normal recovery method
Normal Run	Allows maximum performance of chip. • Default mode out of reset • On-chip voltage regulator is on.	Run	—
Normal Wait - via WFI	Allows peripherals to function while the core is in Sleep mode, reducing power. • NVIC remains sensitive to interrupts • Peripherals continue to be clocked.	Sleep	Interrupt
Normal Stop - via WFI	Places chip in static state. Lowest power mode that retains all registers while maintaining LVD protection. • NVIC is disabled. • AWIC is used to wake up from interrupt. • Peripheral clocks are stopped.	Sleep Deep	Interrupt
VLPR (Very Low-Power Run)	On-chip voltage regulator is in a low-power mode that supplies only enough power to run the chip at a reduced frequency. Only MCG modes BLPI and BLPE can be used in VLPR. • Reduced frequency Flash access mode (1 MHz) • LVD off	Run	—

Table continues on the next page...

Table 7-1. Chip power modes (continued)

Chip mode	Description	Core mode	Normal recovery method
	• In BLPI clock mode, only the fast internal reference oscillator is available to provide a low power nominal 4 MHz source for the core with the nominal bus and flash clock required to be <800 kHz • Alternatively, BLPE clock mode can be used with an external clock or the crystal oscillator providing the clock source.		
VLPW (Very Low-Power Wait) -via WFI	Same as VLPR but with the core in Sleep mode to further reduce power. • NVIC remains sensitive to interrupts (FCLK = ON). • On-chip voltage regulator is in a low-power mode that supplies only enough power to run the chip at a reduced frequency.	Sleep	Interrupt
VLPS (Very Low-Power Stop)-via WFI	Places chip in static state with LVD operation off. Lowest power mode with ADC and pin interrupts functional. • Peripheral clocks are stopped, but OSC, LPTMR, CMP can be used. • TPM and UART can optionally be enabled if their clock source is enabled. • NVIC is disabled (FCLK = OFF); AWIC is used to wake up from interrupt. • On-chip voltage regulator is in a low-power mode that supplies only enough power to run the chip at a reduced frequency. • All SRAM is operating (content retained and I/O states held).	Sleep Deep	Interrupt
VLLS3 (Very Low-Leakage Stop3)	• Most peripherals are disabled (with clocks stopped), but OSC, LPTMR, CMP can be used. • NVIC is disabled. • SRAM_U and SRAM_L remain powered on (content retained and I/O states held).	Sleep Deep	Wake-up Reset
VLLS1 (Very Low-Leakage Stop1)	• Most peripherals are disabled (with clocks stopped), but OSC, LPTMR, CMP can be used. • NVIC is disabled. • All of SRAM_U and SRAM_L are powered off.	Sleep Deep	Wake-up Reset
VLLS0 (Very Low-Leakage Stop 0)	• Most peripherals are disabled (with clocks stopped), but LPTMR can be used. • NVIC is disabled. • All of SRAM_U and SRAM_L are powered off. • LPO disabled, optional POR brown-out detection	Sleep Deep	Wake-up Reset

7.4 Entering and exiting power modes

The WFI instruction invokes wait and stop modes for the chip. The processor exits the low-power mode via an interrupt. For VLLS3 and VLLS1 modes, the wakeup sources are limited to LPTMR, CMP,$\overline{\text{NMI_b}}$ pin, or $\overline{\text{RESET_b}}$ pin assertions. When the $\overline{\text{NMI_b}}$ pin or $\overline{\text{RESET_b}}$ pin have been disabled through associated FTFA_FOPT settings, then these pins are ignored as wakeup sources. The wake-up flow from VLLSx is always through reset.

NOTE

The WFE instruction can have the side effect of entering a low-power mode, but that is not its intended usage. See ARM documentation for more on the WFE instruction.

On VLLS recoveries, the I/O pins continue to be held in a static state after code execution begins, allowing software to reconfigure the system before unlocking the I/O. RAM is retained in VLLS3 only.

7.5 Module operation in low-power modes

The following table illustrates the functionality of each module while the chip is in each of the low power modes. The standard behavior is shown with some exceptions for Compute Operation (CPO) and Partial Stop2 (PSTOP2).

Debug modules are discussed separately; see Debug in low-power modes. Number ratings (such as 4 MHz and 1 Mbit/s) represent the maximum frequencies or maximum data rates per mode. Following is list of terms also used in the table.

- FF = Full functionality. In VLPR and VLPW, the system frequency is limited, but if a module does not have a limitation in its functionality, it is still listed as FF.
- Async operation = Fully functional with alternate clock source, provided the selected clock source remains enabled
- static = Module register states and associated memories are retained.
- powered = Memory is powered to retain contents.
- low power = Memory is powered to retain contents in a lower power state
- OFF = Modules are powered off; module is in reset state upon wake-up. For clocks, OFF means disabled.
- wakeup = Modules can serve as a wake-up source for the chip.

Table 7-2. Module operation in low-power modes

Modules	VLPR	VLPW	Stop	VLPS	VLLSx
Core modules					
NVIC	FF	FF	static	static	OFF
System modules					
Mode controller	FF	FF	FF	FF	FF
Regulator	low power	low power	ON	low power	low power in VLLS3, OFF in VLLS0/1
LVD	disabled	disabled	ON	disabled	disabled

Table continues on the next page...

Table 7-2. Module operation in low-power modes (continued)

Modules	VLPR	VLPW	Stop	VLPS	VLLSx
Brown-out detection	ON	ON	ON	ON	ON in VLLS1/3, optionally disabled in VLLS0[1]
Watchdog	FF static in CPO	FF	static FF in PSTOP2	static	OFF
Clocks					
1 kHz LPO	ON	ON	ON	ON	ON in VLLS1/3, OFF in VLLS0
System oscillator (OSC)	OSCERCLK low range/low power (30~40 kHz)	OSCERCLK low range/ low power (30~40 kHz)	OSCERCLK optional	OSCERCLK low range/low power (30~40 kHz)	low range/low power in VLLS1/3, OFF in VLLS0
MCG	4 MHz IRC	4 MHz IRC	static - MCGIRCLK optional	static - 4MHz IRC optional	OFF
Core clock	4 MHz max	OFF	OFF	OFF	OFF
System clock	4 MHz max OFF in CPO	4 MHz max	OFF	OFF	OFF
Bus clock	1 MHz max OFF in CPO	1 MHz max	OFF 24 MHz max in PSTOP2 from RUN 1MHz max in PSTOP2 from VLPR	OFF	OFF
Memory and memory interfaces					
Flash	1 MHz max access - no program No register access in CPO	low power	low power	low power	OFF
SRAM_U and SRAM_L	low power	low power	low power	low power	low power in VLLS3, OFF in VLLS0/1
Communication interfaces					
UART0	1 Mbps Async operation in CPO	1 Mbit/s	Async operation FF in PSTOP2	Async operation	OFF
SPI0	master mode 500 kbit/s, slave mode 250 kbit/s static, slave mode receive in CPO	master mode 500 kbit/s, slave mode 250 kbit/s	static, slave mode receive FF in PSTOP2	static, slave mode receive	OFF

Table continues on the next page...

Table 7-2. Module operation in low-power modes (continued)

Modules	VLPR	VLPW	Stop	VLPS	VLLSx
I^2C0	50 kbps static, address match wakeup in CPO	50 kbit/s	static, address match wakeup FF in PSTOP2	static, address match wakeup	OFF
I^2C1	100 kbit/s static, address match wakeup in CPO	100 kbit/s	static, address match wakeup	static, address match wakeup	OFF
Timers					
TPM	FF Async operation in CPO	FF	Async operation FF in PSTOP2	Async operation	OFF
LPTMR	FF static in CPO	FF	Async operation FF in PSTOP2	Async operation	Async operation[2]
Analog					
12-bit ADC	FF	FF	ADC internal clock only	ADC internal clock only	OFF
CMP[3]	FF HS or LS compare in CPO	FF	HS or LS compare FF in PSTOP2	HS or LS compare	LS compare in VLLS1/3, OFF in VLLS0
6-bit DAC	FF static in CPO	FF	static FF in PSTOP2	static	static, OFF in VLLS0
Human-machine interfaces					
GPIO	FF IOPORT write only in CPO	FF	static output, wakeup input FF in PSTOP2	static output, wakeup input	OFF, pins latched

1. The STOPCTRL[PORPO] field in the SMC module (SMC_STOPCTRL[PORPO]) controls this option.
2. LPO clock source is not available in VLLS0. Also, to use system OSC in VLLS0 it must be configured for bypass (external clock) operation.Pulse counting is available in all modes.
3. CMP in stop or VLPS supports high speed or low speed external pin to pin or external pin to DAC compares. CMP in VLLSx only supports low speed external pin to pin or external pin to DAC compares. Windowed, sampled & filtered modes of operation are not available while in stop, VLPS or VLLSx modes.

Chapter 8
Security

8.1 Introduction

This device implements security based on the mode selected from the flash module. The following sections provide an overview of flash security and details the effects of security on non-flash modules.

8.2 Flash security

The flash module provides security information to the MCU based on the state held by FTFA_FSEC[SEC]. The MCU, in turn, confirms the security request and limits access to flash resources. During reset, the flash module initializes the FTFA_FSEC register using data read from the security byte of the flash configuration field.

NOTE

The security features apply only to external accesses: debug. CPU accesses to the flash are not affected by the status of FTFA_FSEC.

In the unsecured state, all flash commands are available on the programming interfaces either from the debug port (SWD) or user code execution. When the flash is secured (FTFA_FSEC[SEC] = 00, 01, or 11), the programmer interfaces are only allowed to launch mass erase operations. Additionally, in this mode, the debug port has no access to memory locations.

8.3 Security interactions with other modules

The flash security settings are used by the system to determine what resources are available. The following sections describe the interactions between modules and the flash security settings or the impact that the flash security has on non-flash modules.

8.3.1 Security interactions with Debug

When flash security is active, the SWD port cannot access the memory resources of the MCU.

Although most debug functions are disabled, the debugger can write to the Flash Mass Erase in Progress field of the MDM-AP Control register to trigger a mass erase (Erase All Blocks) command. A mass erase via the debugger is allowed even when some memory locations are protected.

When mass erase is disabled, mass erase via the debugger is blocked.

Chapter 9
Debug

9.1 Introduction

This debug of this device is based on the ARM CoreSight™ architecture and is configured to provide the maximum flexibility as allowed by the restrictions of the pinout and other available resources.

It provides register and memory accessibility from the external debugger interface, basic run/halt control plus 2 breakpoints and 2 watchpoints.

Only one debug interface is supported:

- Serial Wire Debug (SWD)

9.2 Debug port pin descriptions

The debug port pins default after POR to their SWD functionality.

Table 9-1. Serial wire debug pin description

Pin name	Type	Description
SWD_CLK	Input	Serial Wire Clock This pin is the clock for debug logic when in the Serial Wire Debug mode. This pin is pulled down internally.
SWD_DIO	Input / Output	Serial Wire Debug Data Input/Output The SWD_DIO pin is used by an external debug tool for communication and device control. This pin is pulled up internally.

9.3 SWD status and control registers

Through the ARM Debug Access Port (DAP), the debugger has access to the status and control elements, implemented as registers on the DAP bus as shown in Figure 9-1. These registers provide additional control and status for low power mode recovery and typical run-control scenarios. The status register bits also provide a means for the debugger to get updated status of the core without having to initiate a bus transaction across the crossbar switch, thus remaining less intrusive during a debug session.

It is important to note that these DAP control and status registers are not memory mapped within the system memory map and are only accessible via the Debug Access Port using SWD. The MDM-AP is accessible as Debug Access Port 1 with the available registers shown in the table below.

Table 9-2. MDM-AP register summary

Address	Register	Description
0x0100_0000	Status	See MDM-AP Status Register
0x0100_0004	Control	See MDM-AP Control Register
0x0100_00FC	IDR	Read-only identification register that always reads as 0x001C_0020

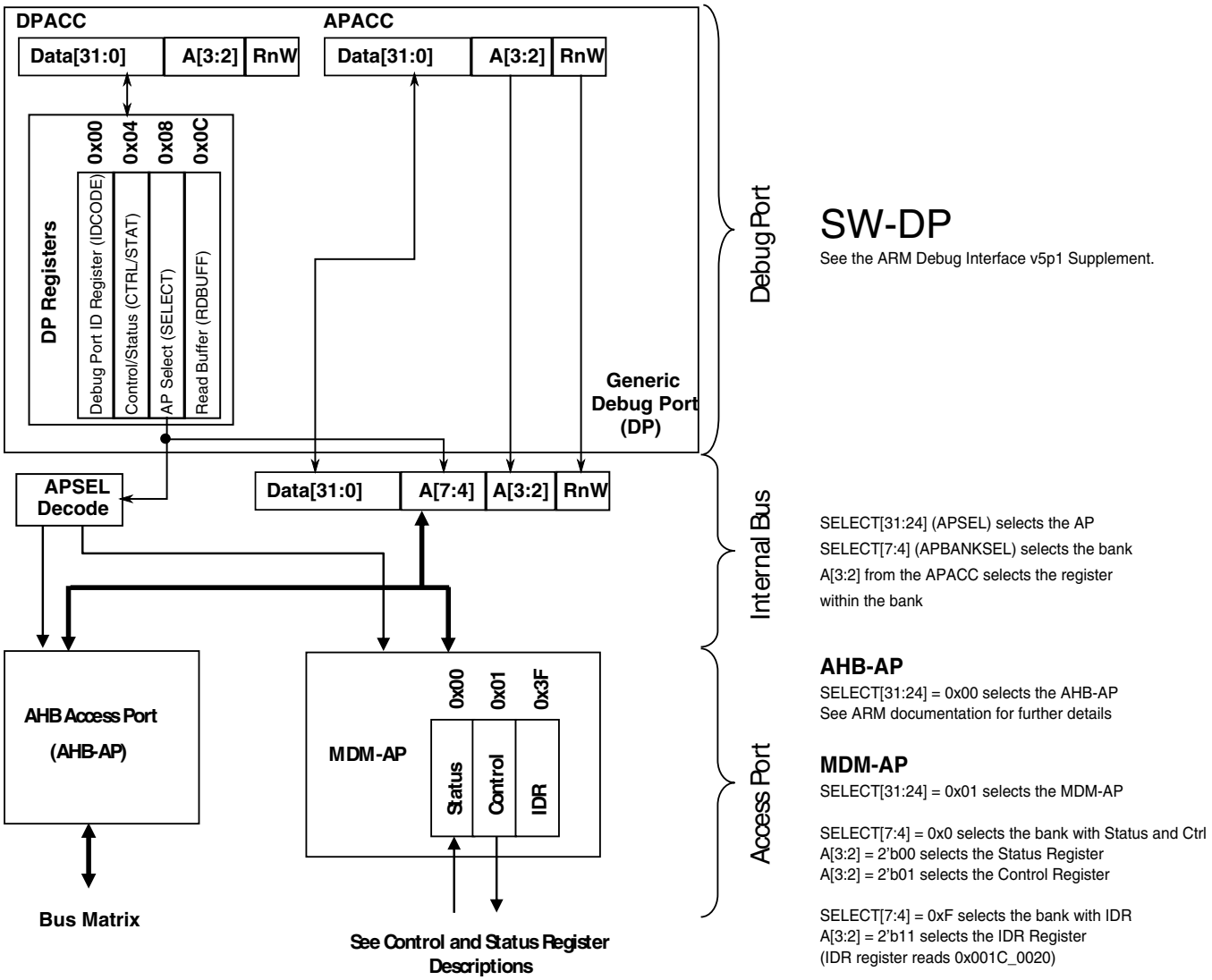

Figure 9-1. MDM AP addressing

9.3.1 MDM-AP Control Register

Table 9-3. MDM-AP Control register assignments

Bit	Name	Secure[1]	Description
0	Flash Mass Erase in Progress	Y	Set to cause mass erase. Cleared by hardware after mass erase operation completes. When mass erase is disabled (via MEEN and SEC settings), the erase request does not occur and the Flash Mass Erase in Progress bit continues to assert until the next system reset.
1	Debug Disable	N	Set to disable debug. Clear to allow debug operation. When set, it overrides the C_DEBUGEN bit within the DHCSR and force disables Debug logic.
2	Debug Request	N	Set to force the core to halt.

Table continues on the next page...

Table 9-3. MDM-AP Control register assignments (continued)

Bit	Name	Secure[1]	Description
			If the core is in a Stop or Wait mode, this bit can be used to wake the core and transition to a halted state.
3	System Reset Request	Y	Set to force a system reset. The system remains held in reset until this bit is cleared.
4	Core Hold Reset	N	Configuration bit to control core operation at the end of system reset sequencing. 0 Normal operation: Release the core from reset along with the rest of the system at the end of system reset sequencing. 1 Suspend operation: Hold the core in reset at the end of reset sequencing. Once the system enters this suspended state, clearing this control bit immediately releases the core from reset and CPU operation begins.
5	VLLSx Debug Request (VLLDBGREQ)	N	Set to configure the system to be held in reset after the next recovery from a VLLSx mode. This bit is ignored on a VLLS wakeup via the Reset pin. During a VLLS wakeup via the Reset pin, the system can be held in reset by holding the reset pin asserted allowing the debugger to reinitialize the debug modules. This bit holds the system in reset when VLLSx modes are exited to allow the debugger time to re-initialize debug IP before the debug session continues. The Mode Controller captures this bit logic on entry to VLLSx modes. Upon exit from VLLSx modes, the Mode Controller will hold the system in reset until VLLDBGACK is asserted. VLLDBGREQ clears automatically due to the POR reset generated as part of the VLLSx recovery.
6	VLLSx Debug Acknowledge (VLLDBGACK)	N	Set to release a system being held in reset following a VLLSx recovery This bit is used by the debugger to release the system reset when it is being held on VLLSx mode exit. The debugger re-initializes all debug IP and then assert this control bit to allow the Mode Controller to release the system from reset and allow CPU operation to begin. VLLDBGACK is cleared by the debugger or can be left set because it clears automatically due to the POR reset generated as part of the next VLLSx recovery.
7	VLLSx Status Acknowledge	N	Set this bit to acknowledge the DAP VLLS Status bits have been read. This acknowledge automatically clears the status bits. This bit is used by the debugger to clear the sticky VLLSx mode entry status bits. This bit is asserted and cleared by the debugger.
8 – 31	Reserved for future use	N	

1. Command available in secure mode

9.3.2 MDM-AP Status Register

Table 9-4. MDM-AP Status register assignments

Bit	Name	Description
0	Flash Mass Erase Acknowledge	The Flash Mass Erase Acknowledge bit is cleared after any system reset. The bit is also cleared at launch of a mass erase command due to write of Flash Mass Erase in Progress bit in MDM AP Control Register. The Flash Mass Erase Acknowledge is set after Flash control logic has started the mass erase operation. When mass erase is disabled (via MEEN and SEC settings), an erase request due to setting of Flash Mass Erase in Progress bit is not acknowledged.
1	Flash Ready	Indicates Flash has been initialized and debugger can be configured even if system is continuing to be held in reset via the debugger.
2	System Security	Indicates the security state. When secure, the debugger does not have access to the system bus or any memory mapped peripherals. This bit indicates when the part is locked and no system bus access is possible.
3	System Reset	Indicates the system reset state. 0 System is in reset. 1 System is not in reset.
4	Reserved	
5	Mass Erase Enable	Indicates if the MCU can be mass erased or not 0 Mass erase is disabled. 1 Mass erase is enabled .
6	Backdoor Access Key Enable	Indicates if the MCU has the backdoor access key enabled. 0 Disabled 1 Enabled
7	LP Enabled	Decode of SMC_PMCTRL[STOPM] field to indicate that VLPS, or VLLSx are the selected power mode the next time the ARM Core enters Deep Sleep. 0 Low Power Stop Mode is not enabled. 1 Low Power Stop Mode is enabled. Usage intended for debug operation in which Run to VLPS is attempted. Per debug definition, the system actually enters the Stop state. A debugger should interpret deep sleep indication (with SLEEPDEEP and SLEEPING asserted), in conjunction with this bit asserted as the debugger-VLPS status indication.
8	Very Low Power Mode	Indicates current power mode is VLPx. This bit is not ‘sticky’ and should always represent whether VLPx is enabled or not. This bit is used to throttle SWD_CLK frequency up/down.
9	Reserved	
10	VLLSx Modes Exit	This bit indicates an exit from VLLSx mode has occurred. The debugger will lose communication while the system is in VLLSx (including access to this register). Once communication is reestablished, this bit indicates that the system had been in VLLSx. Since the debug modules lose their state during VLLSx modes, they need to be reconfigured.

Table continues on the next page...

Table 9-4. MDM-AP Status register assignments (continued)

Bit	Name	Description
		This bit is set during the VLLSx recovery sequence. The VLLSx Mode Exit bit is held until the debugger has had a chance to recognize that a VLLS mode was exited and is cleared by a write of 1 to the VLLSx Status Acknowledge bit in MDM AP Control register.
11 – 15	Reserved for future use	Always read 0.
16	Core Halted	Indicates the core has entered Debug Halt mode
17	Core SLEEPDEEP	Indicates the core has entered a low-power mode SLEEPING==1 and SLEEPDEEP==0 indicates wait or VLPW mode. SLEEPING==1 and SLEEPDEEP==1 indicates stop or VLPS mode.
18	Core SLEEPING	
19 – 31	Reserved for future use	Always read 0.

9.4 Debug resets

The debug system receives the following sources of reset:

- Debug reset (the CDBGRSTREQ field within the DP CTRL/STAT register) that allows the debugger to reset the debug logic.
- System POR reset

Conversely, the debug system is capable of generating system reset using the following mechanism:

- A system reset in the DAP control register which allows the debugger to hold the system in reset.
- SYSRESETREQ field in the NVIC Application Interrupt and Reset control register
- A system reset in the DAP control register which allows the debugger to hold the core in reset.

9.5 Micro Trace Buffer (MTB)

The Micro Trace Buffer (MTB) provides a simple execution trace capability for the Cortex-M0+ processor. When enabled, the MTB records changes in program flow reported by the Cortex-M0+ processor, via the execution trace interface, into a configurable region of the SRAM. Subsequently, an off-chip debugger may extract the trace information, which would allow reconstruction of an instruction flow trace. The MTB does not include any form of load/store data trace capability or tracing of any other information.

In addition to providing the trace capability, the MTB also operates as a simple AHB-Lite SRAM controller. The system bus masters, including the processor, have read/write access to all of the SRAM via the AHB-Lite interface, allowing the memory to be also used to store program and data information. The MTB simultaneously stores the trace information into an attached SRAM and allows bus masters to access the memory. The MTB ensures that trace information write accesses to the SRAM take priority over accesses from the AHB-Lite interface.

The MTB includes trace control registers for configuring and triggering the MTB functions. The MTB also supports triggering via TSTART and TSTOP control functions in the MTB DWT module.

9.6 Debug in low-power modes

In low-power modes, in which the debug modules are kept static or powered off, the debugger cannot gather any debug data for the duration of the low-power mode.

- In the case that the debugger is held static, the debug port returns to full functionality as soon as the low-power mode exits and the system returns to a state with active debug.
- In the case that the debugger logic is powered off, the debugger is reset on recovery and must be reconfigured once the low-power mode is exited.

Power mode entry logic monitors Debug Power Up and System Power Up signals from the debug port as indications that a debugger is active. These signals can be changed in RUN, VLPR, WAIT and VLPW. If the debug signal is active and the system attempts to enter Stop or VLPS, FCLK continues to run to support core register access. In these modes in which FCLK is left active the debug modules have access to core registers but not to system memory resources accessed via the crossbar.

With debug enabled, transitions from Run directly to VLPS result in the system entering Stop mode instead. Status bits within the MDM-AP Status register can be evaluated to determine this pseudo-VLPS state.

NOTE

With the debug enabled, transitions from Run --> VLPR --> VLPS are still possible.

In VLLS mode, all debug modules are powered off and reset at wakeup.

Going into a VLLSx mode causes all the debug controls and settings to be reset. To give time to the debugger to sync up with the HW, the MDM-AP Control register can be configured to hold the system in reset on recovery so that the debugger can regain control and reconfigure debug logic prior to the system exiting reset and resuming operation.

9.7 Debug and security

When flash security is enabled, the debug port capabilities are limited in order to prevent exploitation of secure data. In the secure state, the debugger still has access to the status register and can determine the current security state of the device. In the case of a secure device, the debugger has the capability of only performing a mass erase operation.

Chapter 10
Signal Multiplexing and Signal Descriptions

10.1 Introduction

To optimize functionality in small packages, pins have several functions available via signal multiplexing. This chapter illustrates which of this device's signals are multiplexed on which external pin.

The Port Control block controls which signal is present on the external pin. Refer to that chapter to find which register controls the operation of a specific pin.

10.2 Signal multiplexing integration

This section summarizes how the module is integrated into the device. For a comprehensive description of the module itself, see the module's dedicated chapter.

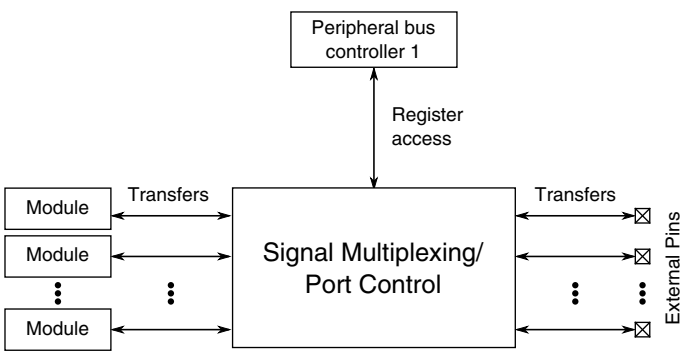

Figure 10-1. Signal multiplexing integration

Table 10-1. Reference links to related information

Topic	Related module	Reference
Full description	Port control	Port control
System memory map		System memory map

Table continues on the next page...

Table 10-1. Reference links to related information (continued)

Topic	Related module	Reference
Clocking		Clock Distribution
Register access	Peripheral bus controller	Peripheral bridge

10.2.1 Port control and interrupt module features

- 32-pin ports

NOTE

Not all pins are available on the device. See the following section for details.

- Each port is assigned one interrupt.

The reset state and read/write characteristics of the fields within the PORTx_PCRn registers is summarized in the table below.

Table 10-2. Port control register configuration summary

This field of PORTx_PCRn	Generally resets to	Except for	Resets to	Configurability
PS	1	PTA0	0	Fixed—All are read only.
PE	0	PTA0 and PTA2	1	Yes—All GPIOs are configurable
DSE	0	No exceptions—all DSE are cleared on reset.	—	4 pins are configurable for High Drive (PTB0, PTB1, PTA12 and PTA13). All others are fixed for Normal Drive and the associated DSE bit is read only.
SRE	1	PTA2, PTA5, PTA6, PTA7, PTB0	0	No— All GPIOs are not configurable
MUX	000	PTA0, PTA2, and PTB5	011	Yes— All GPIOs are configurable. MSB (bit2) of MUX is not writable and always reads 0.
PFE	0	No exceptions—all PFE are cleared on reset.[1]	—	The GPIO shared with $\overline{\text{NMI_b}}$ pin is configurable. All other GPIOs are fixed and read only.
IRQC	000	No exceptions—all are cleared on reset.	—	Yes
ISF	0	No exceptions—all are cleared on reset.	—	—

1. The $\overline{\text{RESET_b}}$ pin has the passive analog filter fixed enabled when functioning as the $\overline{\text{RESET_b}}$ pin (FTFA_FOPT[RESET_PIN_CFG] = 1) and fixed disabled when configured for other shared functions.

10.2.2 Clock gating

The clock to the port control module can be gated on and off using the SCGC5[PORTx] bits in the SIM module. These bits are cleared after any reset, which disables the clock to the corresponding module to conserve power. Prior to initializing the corresponding module, set SIM_SCGC5[PORTx] to enable the clock. Before turning off the clock, make sure to disable the module. For more details, see the Clock distribution chapter.

10.2.3 Signal multiplexing constraints

1. A given peripheral function must be assigned to a maximum of one package pin. Do not program the same function to more than one pin.
2. To ensure the best signal timing for a given peripheral's interface, choose the pins in closest proximity to each other.

10.3 Pinout

10.3.1 KL02 signal multiplexing and pin assignments

The following table shows the signals available on each pin and the locations of these pins on the devices supported by this document. The Port Control Module is responsible for selecting which ALT functionality is available on each pin.

NOTE

PTB3 and PTB4 are true open drain pins. The external pullup resistor must be added to make them output correct values in using I2C, GPIO, and UART0.

32 QFN	24 QFN	16 QFN	Pin Name	Default	ALT0	ALT1	ALT2	ALT3
1	1	—	PTB6/ IRQ_2/ LPTMR0_ALT3	DISABLED		PTB6/ IRQ_2/ LPTMR0_ALT3	TPM1_CH1	TPM_CLKIN1
2	2	—	PTB7/ IRQ_3	DISABLED		PTB7/ IRQ_3	TPM1_CH0	
3	3	1	VDD	VDD	VDD			
4	3	1	VREFH	VREFH	VREFH			

32 QFN	24 QFN	16 QFN	Pin Name	Default	ALT0	ALT1	ALT2	ALT3
5	4	2	VREFL	VREFL	VREFL			
6	4	2	VSS	VSS	VSS			
7	5	3	PTA3	EXTAL0	EXTAL0	PTA3	I2C0_SCL	I2C1_SDA
8	6	4	PTA4	XTAL0	XTAL0	PTA4	I2C0_SDA	I2C1_SCL
9	7	5	PTA5	DISABLED		PTA5	TPM0_CH1	SPI0_SS_b
10	8	6	PTA6	DISABLED		PTA6	TPM0_CH0	SPI0_MISO
11	—	—	PTB8	ADC0_SE11	ADC0_SE11	PTB8		
12	—	—	PTB9	ADC0_SE10	ADC0_SE10	PTB9		
13	9	—	PTB10	ADC0_SE9	ADC0_SE9	PTB10	TPM0_CH1	
14	10	—	PTB11	ADC0_SE8	ADC0_SE8	PTB11	TPM0_CH0	
15	11	7	PTA7/ IRQ_4	ADC0_SE7	ADC0_SE7	PTA7/ IRQ_4	SPI0_MISO	SPI0_MOSI
16	12	8	PTB0/ IRQ_5	ADC0_SE6	ADC0_SE6	PTB0/ IRQ_5	EXTRG_IN	SPI0_SCK
17	13	9	PTB1/ IRQ_6	ADC0_SE5/ CMP0_IN3	ADC0_SE5/ CMP0_IN3	PTB1/ IRQ_6	UART0_TX	UART0_RX
18	14	10	PTB2/ IRQ_7	ADC0_SE4	ADC0_SE4	PTB2/ IRQ_7	UART0_RX	UART0_TX
19	15	—	PTA8	ADC0_SE3	ADC0_SE3	PTA8	I2C1_SCL	
20	16	—	PTA9	ADC0_SE2	ADC0_SE2	PTA9	I2C1_SDA	
21	—	—	PTA10/ IRQ_8	DISABLED		PTA10/ IRQ_8		
22	—	—	PTA11/ IRQ_9	DISABLED		PTA11/ IRQ_9		
23	17	11	PTB3/ IRQ_10	DISABLED		PTB3/ IRQ_10	I2C0_SCL	UART0_TX
24	18	12	PTB4/ IRQ_11	DISABLED		PTB4/ IRQ_11	I2C0_SDA	UART0_RX
25	19	13	PTB5/ IRQ_12	NMI_b	ADC0_SE1/ CMP0_IN1	PTB5/ IRQ_12	TPM1_CH1	NMI_b
26	20	—	PTA12/ IRQ_13/ LPTMR0_ALT2	ADC0_SE0/ CMP0_IN0	ADC0_SE0/ CMP0_IN0	PTA12/ IRQ_13/ LPTMR0_ALT2	TPM1_CH0	TPM_CLKIN0
27	—	—	PTA13	DISABLED		PTA13		
28	—	—	PTB12	DISABLED		PTB12		
29	21	—	PTB13	ADC0_SE13	ADC0_SE13	PTB13	TPM1_CH1	
30	22	14	PTA0/ IRQ_0	SWD_CLK	ADC0_SE12/ CMP0_IN2	PTA0/ IRQ_0	TPM1_CH0	SWD_CLK
31	23	15	PTA1/ IRQ_1/ LPTMR0_ALT1	RESET_b		PTA1/ IRQ_1/ LPTMR0_ALT1	TPM_CLKIN0	RESET_b
32	24	16	PTA2	SWD_DIO		PTA2	CMP0_OUT	SWD_DIO

10.3.2 KL02 pinouts

The following figures show the pinout diagrams for the devices supported by this document. Many signals may be multiplexed onto a single pin. To determine what signals can be used on which pin, see KL02 signal multiplexing and pin assignments.

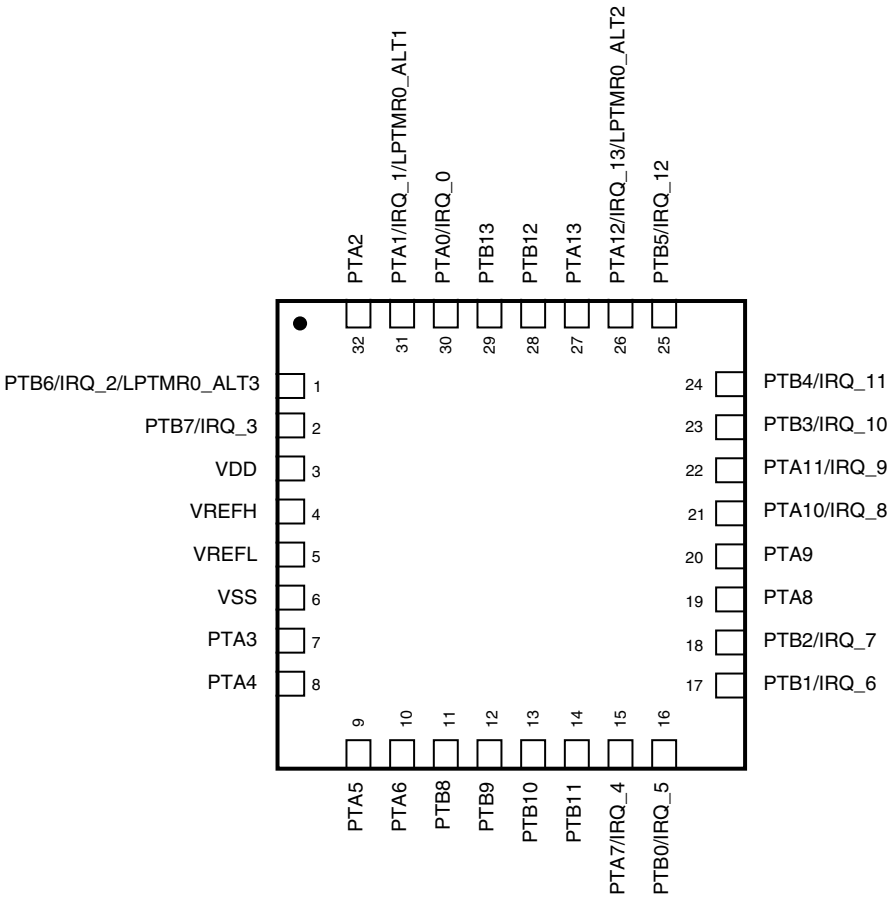

Figure 10-2. KL02 32-pin QFN pinout diagram

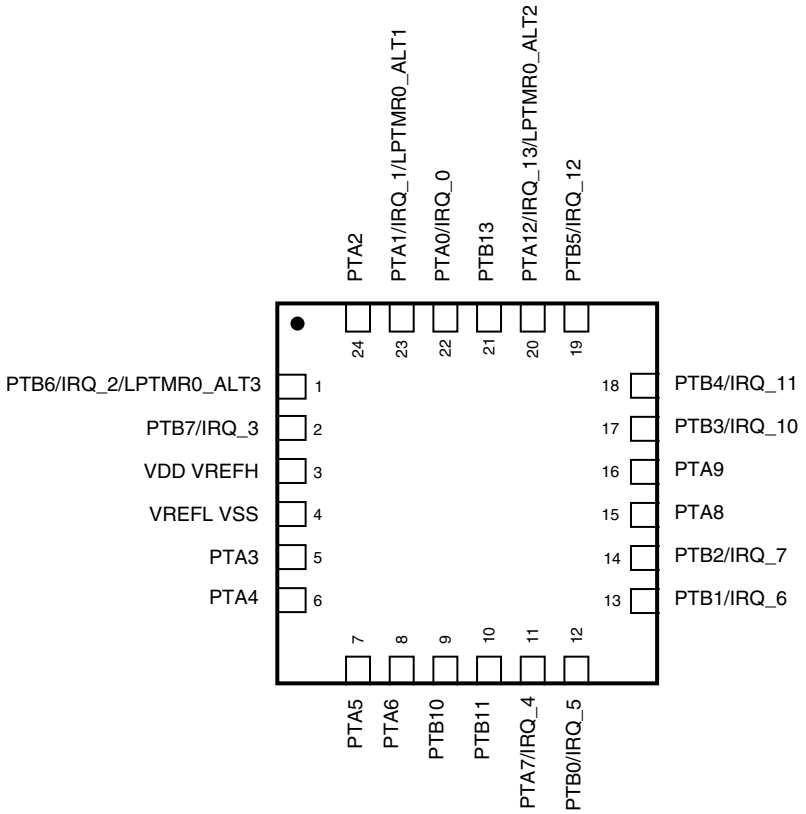

Figure 10-3. KL02 24-pin QFN pinout diagram

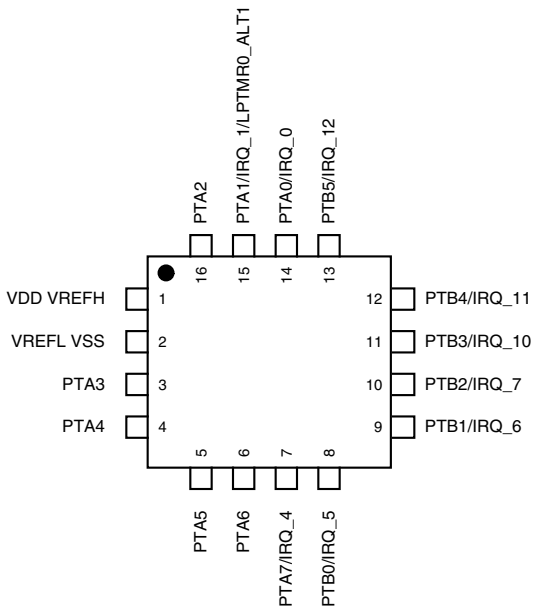

Figure 10-4. KL02 16-pin QFN pinout diagram

10.4 Module Signal Description Tables

The following sections correlate the chip-level signal name with the signal name used in the module's chapter. They also briefly describe the signal function and direction.

10.4.1 Core modules

Table 10-3. SWD signal descriptions

Chip signal name	Module signal name	Description	I/O
SWD_DIO	SWD_DIO	Serial Wire Debug Data Input/Output The SWD_DIO pin is used by an external debug tool for communication and device control. This pin is pulled up internally.	Input / Output
SWD_CLK	SWD_CLK	Serial Wire Clock This pin is the clock for debug logic when in the Serial Wire Debug mode. This pin is pulled down internally.	Input

10.4.2 System modules

Table 10-4. System signal descriptions

Chip signal name	Module signal name	Description	I/O
$\overline{\text{NMI_b}}$	—	Non-maskable interrupt **NOTE:** Driving the $\overline{\text{NMI_b}}$ signal low forces a non-maskable interrupt, if the $\overline{\text{NMI_b}}$ function is selected on the corresponding pin.	I
$\overline{\text{RESET_b}}$	—	Reset bidirectional signal	I/O
VDD	—	MCU power	I
VSS	—	MCU ground	I

10.4.3 Clock modules

Table 10-5. OSC signal descriptions

Chip signal name	Module signal name	Description	I/O
EXTAL0	EXTAL	External clock/Oscillator input	I
XTAL0	XTAL	Oscillator output	O

10.4.4 Memories and memory interfaces

10.4.5 Analog

Table 10-6. ADC0 signal descriptions

Chip signal name	Module signal name	Description	I/O
ADC0_SEn	AD*n*	Single-Ended Analog Channel Inputs	I
VREFH	V_{REFSH}	Voltage Reference Select High	I
VREFL	V_{REFSL}	Voltage Reference Select Low	I
VDDA	V_{DDA}	Analog Power Supply	I
VSSA	V_{SSA}	Analog Ground	I

Table 10-7. CMP0 signal descriptions

Chip signal name	Module signal name	Description	I/O
CMP0_IN[5:0]	IN[5:0]	Analog voltage inputs	I
CMP0_OUT	CMPO	Comparator output	O

10.4.6 Timer Modules

Table 10-8. TPM0 Signal Descriptions

Chip signal name	Module signal name	Description	I/O
TPM_CLKIN[1:0]	EXTCLK	External clock. FTM external clock can be selected to drive the FTM counter.	I
TPM0_CH[5:0]	CHn	FTM channel (n), where n can be 7-0	I/O

Table 10-9. TPM1 Signal Descriptions

Chip signal name	Module signal name	Description	I/O
TPM_CLKIN[1:0]	TPM_EXTCLK	External clock. TPM external clock can be selected to increment the TPM counter on every rising edge synchronized to the counter clock.	I
TPM1_CH[1:0]	TPM_CHn	TPM channel (n = 1 to 0)	I/O

Table 10-10. LPTMR0 Signal Descriptions

Chip signal name	Module signal name	Description	I/O
LPTMR0_ALT[2:1]	LPTMR_ALT*n*	Pulse Counter Input pin	I

10.4.7 Communication interfaces

Table 10-11. SPI0 signal descriptions

Chip signal name	Module signal name	Description	I/O
SPI0_MISO	MISO	Master Data In, Slave Data Out	I/O
SPI0_MOSI	MOSI	Master Data Out, Slave Data In	I/O
SPI0_SCLK	SPSCK	SPI Serial Clock	I/O
SPI0_PCS0	$\overline{SS}$	Slave Select	I/O

Table 10-12. I²C0 signal descriptions

Chip signal name	Module signal name	Description	I/O
I2C0_SCL	SCL	Bidirectional serial clock line of the I²C system.	I/O
I2C0_SDA	SDA	Bidirectional serial data line of the I²C system.	I/O

Table 10-13. I²C1 Signal Descriptions

Chip signal name	Module signal name	Description	I/O
I2C1_SCL	SCL	Bidirectional serial clock line of the I²C system.	I/O
I2C1_SDA	SDA	Bidirectional serial data line of the I²C system.	I/O

Table 10-14. UART0 signal descriptions

Chip signal name	Module signal name	Description	I/O
UART0_TX	TxD	Transmit data	O
UART0_RX	RxD	Receive data	I

10.4.8 Human-machine interfaces (HMI)

Table 10-15. GPIO Signal Descriptions

Chip signal name	Module signal name	Description	I/O
PTA[31:0][1]	PORTA31–PORTA0	General-purpose input/output	I/O
PTB[31:0][1]	PORTB31–PORTB0	General-purpose input/output	I/O

1. The available GPIO pins depend on the specific package. See the signal multiplexing section for which exact GPIO signals are available.

Chapter 11
Port Control and Interrupts (PORT)

11.1 Introduction

NOTE

For the chip-specific implementation details of this module's instances, see the chip configuration information.

11.2 Overview

The port control and interrupt (PORT) module provides support for port control, and external interrupt functions. Most functions can be configured independently for each pin in the 32-bit port and affect the pin regardless of its pin muxing state.

There is one instance of the PORT module for each port. Not all pins within each port are implemented on a specific device.

11.2.1 Features

The PORT module has the following features:

- Pin interrupt on selected pins
  - Interrupt flag and enable registers for each pin
  - Support for edge sensitive (rising, falling, both) or level sensitive (low, high) configured per pin
  - Support for interrupt request configured per pin
  - Asynchronous wakeup in Low-Power modes
  - Pin interrupt is functional in all digital Pin Muxing modes
- Port control

- Individual pull control fields with pullup, pulldown, and pull-disable support on selected pins
- Individual drive strength field supporting high and low drive strength on selected pins
- Individual slew rate field supporting fast and slow slew rates on selected pins
- Individual input passive filter field supporting enable and disable of the individual input passive filter on selected pins
- Individual mux control field supporting analog or pin disabled, GPIO, and up to four chip-specific digital functions
- Pad configuration fields are functional in all digital Pin Muxing modes

11.2.2 Modes of operation

11.2.2.1 Run mode

In Run mode, the PORT operates normally.

11.2.2.2 Wait mode

In Wait mode, PORT continues to operate normally and may be configured to exit the Low-Power mode if an enabled interrupt is detected.

11.2.2.3 Stop mode

In Stop mode, the PORT can be configured to exit the Low-Power mode via an asynchronous wakeup signal if an enabled interrupt is detected.

11.2.2.4 Debug mode

In Debug mode, PORT operates normally.

11.3 External signal description

The following table describes the PORT external signal.

Table 11-1. Signal properties

Name	Function	I/O	Reset	Pull
PORTx[31:0]	External interrupt	I/O	0	-

NOTE

Not all pins within each port are implemented on each device.

11.4 Detailed signal description

The following table contains the detailed signal description for the PORT interface.

Table 11-2. PORT interface—detailed signal description

Signal	I/O	Description	
PORTx[31:0]	I/O	External interrupt.	
		State meaning	Asserted—pin is logic one. Negated—pin is logic zero.
		Timing	Assertion—may occur at any time and can assert asynchronously to the system clock. Negation—may occur at any time and can assert asynchronously to the system clock.

11.5 Memory map and register definition

Any read or write access to the PORT memory space that is outside the valid memory map results in a bus error. All register accesses complete with zero wait states.

PORT memory map

Absolute address (hex)	Register name	Width (in bits)	Access	Reset value	Section/ page
4004_9000	Pin Control Register n (PORTA_PCR0)	32	R/W	See section	11.5.1/138
4004_9004	Pin Control Register n (PORTA_PCR1)	32	R/W	See section	11.5.1/138
4004_9008	Pin Control Register n (PORTA_PCR2)	32	R/W	See section	11.5.1/138
4004_900C	Pin Control Register n (PORTA_PCR3)	32	R/W	See section	11.5.1/138
4004_9010	Pin Control Register n (PORTA_PCR4)	32	R/W	See section	11.5.1/138
4004_9014	Pin Control Register n (PORTA_PCR5)	32	R/W	See section	11.5.1/138
4004_9018	Pin Control Register n (PORTA_PCR6)	32	R/W	See section	11.5.1/138
4004_901C	Pin Control Register n (PORTA_PCR7)	32	R/W	See section	11.5.1/138

Table continues on the next page...

PORT memory map (continued)

Absolute address (hex)	Register name	Width (in bits)	Access	Reset value	Section/ page
4004_9020	Pin Control Register n (PORTA_PCR8)	32	R/W	See section	11.5.1/138
4004_9024	Pin Control Register n (PORTA_PCR9)	32	R/W	See section	11.5.1/138
4004_9028	Pin Control Register n (PORTA_PCR10)	32	R/W	See section	11.5.1/138
4004_902C	Pin Control Register n (PORTA_PCR11)	32	R/W	See section	11.5.1/138
4004_9030	Pin Control Register n (PORTA_PCR12)	32	R/W	See section	11.5.1/138
4004_9034	Pin Control Register n (PORTA_PCR13)	32	R/W	See section	11.5.1/138
4004_9038	Pin Control Register n (PORTA_PCR14)	32	R/W	See section	11.5.1/138
4004_903C	Pin Control Register n (PORTA_PCR15)	32	R/W	See section	11.5.1/138
4004_9040	Pin Control Register n (PORTA_PCR16)	32	R/W	See section	11.5.1/138
4004_9044	Pin Control Register n (PORTA_PCR17)	32	R/W	See section	11.5.1/138
4004_9048	Pin Control Register n (PORTA_PCR18)	32	R/W	See section	11.5.1/138
4004_904C	Pin Control Register n (PORTA_PCR19)	32	R/W	See section	11.5.1/138
4004_9050	Pin Control Register n (PORTA_PCR20)	32	R/W	See section	11.5.1/138
4004_9054	Pin Control Register n (PORTA_PCR21)	32	R/W	See section	11.5.1/138
4004_9058	Pin Control Register n (PORTA_PCR22)	32	R/W	See section	11.5.1/138
4004_905C	Pin Control Register n (PORTA_PCR23)	32	R/W	See section	11.5.1/138
4004_9060	Pin Control Register n (PORTA_PCR24)	32	R/W	See section	11.5.1/138
4004_9064	Pin Control Register n (PORTA_PCR25)	32	R/W	See section	11.5.1/138
4004_9068	Pin Control Register n (PORTA_PCR26)	32	R/W	See section	11.5.1/138
4004_906C	Pin Control Register n (PORTA_PCR27)	32	R/W	See section	11.5.1/138
4004_9070	Pin Control Register n (PORTA_PCR28)	32	R/W	See section	11.5.1/138
4004_9074	Pin Control Register n (PORTA_PCR29)	32	R/W	See section	11.5.1/138
4004_9078	Pin Control Register n (PORTA_PCR30)	32	R/W	See section	11.5.1/138
4004_907C	Pin Control Register n (PORTA_PCR31)	32	R/W	See section	11.5.1/138
4004_9080	Global Pin Control Low Register (PORTA_GPCLR)	32	W (always reads 0)	0000_0000h	11.5.2/140
4004_9084	Global Pin Control High Register (PORTA_GPCHR)	32	W (always reads 0)	0000_0000h	11.5.3/141
4004_90A0	Interrupt Status Flag Register (PORTA_ISFR)	32	w1c	0000_0000h	11.5.4/141
4004_A000	Pin Control Register n (PORTB_PCR0)	32	R/W	See section	11.5.1/138
4004_A004	Pin Control Register n (PORTB_PCR1)	32	R/W	See section	11.5.1/138
4004_A008	Pin Control Register n (PORTB_PCR2)	32	R/W	See section	11.5.1/138
4004_A00C	Pin Control Register n (PORTB_PCR3)	32	R/W	See section	11.5.1/138
4004_A010	Pin Control Register n (PORTB_PCR4)	32	R/W	See section	11.5.1/138
4004_A014	Pin Control Register n (PORTB_PCR5)	32	R/W	See section	11.5.1/138
4004_A018	Pin Control Register n (PORTB_PCR6)	32	R/W	See section	11.5.1/138
4004_A01C	Pin Control Register n (PORTB_PCR7)	32	R/W	See section	11.5.1/138

Table continues on the next page...

PORT memory map (continued)

Absolute address (hex)	Register name	Width (in bits)	Access	Reset value	Section/ page
4004_A020	Pin Control Register n (PORTB_PCR8)	32	R/W	See section	11.5.1/138
4004_A024	Pin Control Register n (PORTB_PCR9)	32	R/W	See section	11.5.1/138
4004_A028	Pin Control Register n (PORTB_PCR10)	32	R/W	See section	11.5.1/138
4004_A02C	Pin Control Register n (PORTB_PCR11)	32	R/W	See section	11.5.1/138
4004_A030	Pin Control Register n (PORTB_PCR12)	32	R/W	See section	11.5.1/138
4004_A034	Pin Control Register n (PORTB_PCR13)	32	R/W	See section	11.5.1/138
4004_A038	Pin Control Register n (PORTB_PCR14)	32	R/W	See section	11.5.1/138
4004_A03C	Pin Control Register n (PORTB_PCR15)	32	R/W	See section	11.5.1/138
4004_A040	Pin Control Register n (PORTB_PCR16)	32	R/W	See section	11.5.1/138
4004_A044	Pin Control Register n (PORTB_PCR17)	32	R/W	See section	11.5.1/138
4004_A048	Pin Control Register n (PORTB_PCR18)	32	R/W	See section	11.5.1/138
4004_A04C	Pin Control Register n (PORTB_PCR19)	32	R/W	See section	11.5.1/138
4004_A050	Pin Control Register n (PORTB_PCR20)	32	R/W	See section	11.5.1/138
4004_A054	Pin Control Register n (PORTB_PCR21)	32	R/W	See section	11.5.1/138
4004_A058	Pin Control Register n (PORTB_PCR22)	32	R/W	See section	11.5.1/138
4004_A05C	Pin Control Register n (PORTB_PCR23)	32	R/W	See section	11.5.1/138
4004_A060	Pin Control Register n (PORTB_PCR24)	32	R/W	See section	11.5.1/138
4004_A064	Pin Control Register n (PORTB_PCR25)	32	R/W	See section	11.5.1/138
4004_A068	Pin Control Register n (PORTB_PCR26)	32	R/W	See section	11.5.1/138
4004_A06C	Pin Control Register n (PORTB_PCR27)	32	R/W	See section	11.5.1/138
4004_A070	Pin Control Register n (PORTB_PCR28)	32	R/W	See section	11.5.1/138
4004_A074	Pin Control Register n (PORTB_PCR29)	32	R/W	See section	11.5.1/138
4004_A078	Pin Control Register n (PORTB_PCR30)	32	R/W	See section	11.5.1/138
4004_A07C	Pin Control Register n (PORTB_PCR31)	32	R/W	See section	11.5.1/138
4004_A080	Global Pin Control Low Register (PORTB_GPCLR)	32	W (always reads 0)	0000_0000h	11.5.2/140
4004_A084	Global Pin Control High Register (PORTB_GPCHR)	32	W (always reads 0)	0000_0000h	11.5.3/141
4004_A0A0	Interrupt Status Flag Register (PORTB_ISFR)	32	w1c	0000_0000h	11.5.4/141

11.5.1 Pin Control Register n (PORTx_PCR*n*)

NOTE

Refer to the Signal Multiplexing and Pin Assignment chapter for the reset value of this device.

See the GPIO Configuration section for details on the available functions for each pin.

Do not modify pin configuration registers associated with pins not available in your selected package. All un-bonded pins not available in your package will default to DISABLE state for lowest power consumption.

Address: Base address + 0h offset + (4d × i), where i=0d to 31d

Bit	31	30	29	28	27	26	25	24	23	22	21	20	19	18	17	16
R	0							ISF	0				IRQC			
W								w1c								
Reset	0	0	0	0	0	0	0	0	0	0	0	0	0	0	0	0

Bit	15	14	13	12	11	10	9	8	7	6	5	4	3	2	1	0
R	0					MUX			0	DSE	0	PFE	0	SRE	PE	PS
W																
Reset	0	0	0	0	0	*	*	*	0	*	0	*	0	*	*	*

* Notes:
- MUX field: Varies by port. See Signal Multiplexing and Signal Descriptions chapter for reset values per port.
- DSE field: Varies by port. See Signal Multiplexing and Signal Descriptions chapter for reset values per port.
- PFE field: Varies by port. See Signal Multiplexing and Signal Descriptions chapter for reset values per port.
- SRE field: Varies by port. See Signal Multiplexing and Signal Descriptions chapter for reset values per port.
- PE field: Varies by port. See Signal Multiplexing and Signal Descriptions chapter for reset values per port.
- PS field: Varies by port. See Signal Multiplexing and Signal Descriptions chapter for reset values per port.

PORTx_PCR*n* field descriptions

Field	Description
31–25 Reserved	This field is reserved. This read-only field is reserved and always has the value 0.
24 ISF	Interrupt Status Flag This bit is read only for pins that do not support interrupt generation. The pin interrupt configuration is valid in all digital pin muxing modes.

Table continues on the next page...

PORTx_PCR*n* field descriptions (continued)

Field	Description
	0 Configured interrupt is not detected. 1 Configured interrupt is detected. The flag remains set until a logic one is written to the flag. If the pin is configured for a level sensitive interrupt and the pin remains asserted, then the flag is set again immediately after it is cleared.
23–20 Reserved	This field is reserved. This read-only field is reserved and always has the value 0.
19–16 IRQC	Interrupt Configuration This field is read only for pins that do not support interrupt generation. The pin interrupt configuration is valid in all digital pin muxing modes. The corresponding pin is configured to generate interrupt request as follows: 0000 Interrupt request disabled. 1000 Interrupt when logic zero. 1001 Interrupt on rising edge. 1010 Interrupt on falling edge. 1011 Interrupt on either edge. 1100 Interrupt when logic one. Others Reserved.
15–11 Reserved	This field is reserved. This read-only field is reserved and always has the value 0.
10–8 MUX	Pin Mux Control Not all pins support all pin muxing slots. Unimplemented pin muxing slots are reserved and may result in configuring the pin for a different pin muxing slot. The corresponding pin is configured in the following pin muxing slot as follows: 000 Pin disabled (analog). 001 Alternative 1 (GPIO). 010 Alternative 2 (chip-specific). 011 Alternative 3 (chip-specific). 100 Alternative 4 (chip-specific). 101 Alternative 5 (chip-specific). 110 Alternative 6 (chip-specific). 111 Alternative 7 (chip-specific).
7 Reserved	This field is reserved. This read-only field is reserved and always has the value 0.
6 DSE	Drive Strength Enable This bit is read only for pins that do not support a configurable drive strength. Drive strength configuration is valid in all digital pin muxing modes. 0 Low drive strength is configured on the corresponding pin, if pin is configured as a digital output. 1 High drive strength is configured on the corresponding pin, if pin is configured as a digital output.
5 Reserved	This field is reserved. This read-only field is reserved and always has the value 0.
4 PFE	Passive Filter Enable This bit is read only for pins that do not support a configurable passive input filter.

Table continues on the next page...

PORTx_PCR*n* field descriptions (continued)

Field	Description
	Passive filter configuration is valid in all digital pin muxing modes. 0 Passive input filter is disabled on the corresponding pin. 1 Passive input filter is enabled on the corresponding pin, if the pin is configured as a digital input. Refer to the device data sheet for filter characteristics.
3 Reserved	This field is reserved. This read-only field is reserved and always has the value 0.
2 SRE	Slew Rate Enable This bit is read only for pins that do not support a configurable slew rate. Slew rate configuration is valid in all digital pin muxing modes. 0 Fast slew rate is configured on the corresponding pin, if the pin is configured as a digital output. 1 Slow slew rate is configured on the corresponding pin, if the pin is configured as a digital output.
1 PE	Pull Enable This bit is read only for pins that do not support a configurable pull resistor. Refer to the Chapter of Signal Multiplexing and Signal Descriptions for the pins that support a configurable pull resistor. Pull configuration is valid in all digital pin muxing modes. 0 Internal pullup or pulldown resistor is not enabled on the corresponding pin. 1 Internal pullup or pulldown resistor is enabled on the corresponding pin, if the pin is configured as a digital input.
0 PS	Pull Select This bit is read only for pins that do not support a configurable pull resistor direction. Pull configuration is valid in all digital pin muxing modes. 0 Internal pulldown resistor is enabled on the corresponding pin, if the corresponding Port Pull Enable field is set. 1 Internal pullup resistor is enabled on the corresponding pin, if the corresponding Port Pull Enable field is set.

11.5.2 Global Pin Control Low Register (PORTx_GPCLR)

Only 32-bit writes are supported to this register.

Address: Base address + 80h offset

Bit	31	30	29	28	27	26	25	24	23	22	21	20	19	18	17	16	15	14	13	12	11	10	9	8	7	6	5	4	3	2	1	0
R	0																0															
W	GPWE																GPWD															
Reset	0	0	0	0	0	0	0	0	0	0	0	0	0	0	0	0	0	0	0	0	0	0	0	0	0	0	0	0	0	0	0	0

PORTx_GPCLR field descriptions

Field	Description
31–16 GPWE	Global Pin Write Enable

Table continues on the next page...

PORTx_GPCLR field descriptions (continued)

Field	Description
	Selects which Pin Control Registers (15 through 0) bits [15:0] update with the value in GPWD. 0 Corresponding Pin Control Register is not updated with the value in GPWD. 1 Corresponding Pin Control Register is updated with the value in GPWD.
GPWD	Global Pin Write Data Write value that is written to all Pin Control Registers bits [15:0] that are selected by GPWE.

11.5.3 Global Pin Control High Register (PORTx_GPCHR)

Only 32-bit writes are supported to this register.

Address: Base address + 84h offset

Bit	31	30	29	28	27	26	25	24	23	22	21	20	19	18	17	16	15	14	13	12	11	10	9	8	7	6	5	4	3	2	1	0
R	0																0															
W	GPWE																GPWD															
Reset	0	0	0	0	0	0	0	0	0	0	0	0	0	0	0	0	0	0	0	0	0	0	0	0	0	0	0	0	0	0	0	0

PORTx_GPCHR field descriptions

Field	Description
31–16 GPWE	Global Pin Write Enable Selects which Pin Control Registers (31 through 16) bits [15:0] update with the value in GPWD. 0 Corresponding Pin Control Register is not updated with the value in GPWD. 1 Corresponding Pin Control Register is updated with the value in GPWD.
GPWD	Global Pin Write Data Write value that is written to all Pin Control Registers bits [15:0] that are selected by GPWE.

11.5.4 Interrupt Status Flag Register (PORTx_ISFR)

The corresponding bit is read only for pins that do not support interrupt generation.

The pin interrupt configuration is valid in all digital pin muxing modes. The Interrupt Status Flag for each pin is also visible in the corresponding Pin Control Register, and each flag can be cleared in either location.

Address: Base address + A0h offset

Bit	31	30	29	28	27	26	25	24	23	22	21	20	19	18	17	16	15	14	13	12	11	10	9	8	7	6	5	4	3	2	1	0
R	ISF																															
W	w1c																															
Reset	0	0	0	0	0	0	0	0	0	0	0	0	0	0	0	0	0	0	0	0	0	0	0	0	0	0	0	0	0	0	0	0

PORTx_ISFR field descriptions

Field	Description
ISF	Interrupt Status Flag Each bit in the field indicates the detection of the configured interrupt of the same number as the field. 0 Configured interrupt is not detected. 1 Configured interrupt is detected. The flag remains set until a logic one is written to the flag. If the pin is configured for a level sensitive interrupt and the pin remains asserted, then the flag is set again immediately after it is cleared.

11.6 Functional description

11.6.1 Pin control

Each port pin has a corresponding pin control register, PORT_PCRn, associated with it.

The upper half of the pin control register configures the pin's capability to interrupt the CPU on a rising/falling edge or both edges as well as a logic level occurring on the port pin. It also includes a flag to indicate that an interrupt has occurred.

The lower half of the pin control register configures the following functions for each pin within the 32-bit port.

- Pullup or pulldown enable on selected pins
- Drive strength and slew rate configuration on selected pins
- Passive input filter enable on selected pins
- Pin Muxing mode

The functions apply across all digital Pin Muxing modes and individual peripherals do not override the configuration in the pin control register. For example, if an I^2C function is enabled on a pin, that does not override the pullup configuration for that pin.

When the Pin Muxing mode is configured for analog or is disabled, all the digital functions on that pin are disabled. This includes the pullup and pulldown enables, and passive filter enable.

The configuration of each pin control register is retained when the PORT module is disabled.

11.6.2 Global pin control

The two global pin control registers allow a single register write to update the lower half of the pin control register on up to sixteen pins, all with the same value.

The global pin control registers are designed to enable software to quickly configure multiple pins within the one port for the same peripheral function. However, the interrupt functions cannot be configured using the global pin control registers.

The global pin control registers are write-only registers, that always read as zero.

11.6.3 External interrupts

The external interrupt capability of the PORT module is available in all digital pin muxing modes provided the PORT module is enabled.

Each pin can be individually configured for any of the following external interrupt modes:

- Interrupt disabled, default out of reset
- Active high level sensitive interrupt
- Active low level sensitive interrupt
- Rising edge sensitive interrupt
- Falling edge sensitive interrupt
- Rising and falling edge sensitive interrupt

The interrupt status flag is set when the configured edge or level is detected on the pin . When not in Stop mode, the input is first synchronized to the bus clock to detect the configured level or edge transition.

The PORT module generates a single interrupt that asserts when the interrupt status flag is set for any enabled interrupt for that port. The interrupt negates after the interrupt status flags for all enabled interrupts have been cleared by writing a logic 1 to the ISF flag in either the PORT_ISFR or PORT_PCRn registers.

During Stop mode, the interrupt status flag for any enabled interrupt is asynchronously set if the required level or edge is detected. This also generates an asynchronous wakeup signal to exit the Low-Power mode.

Chapter 12
System Integration Module (SIM)

12.1 Introduction

The system integration module (SIM) provides system control and chip configuration registers.

12.1.1 Features

- System clocking configuration
  - System clock divide values
  - Architectural clock gating control
  - UART0 and TPM clock selection
- Flash and System RAM size configuration
- TPM external clock and input capture selection
- UART receive/transmit source selection/configuration

12.2 Memory map and register definition

The SIM module contains many bitfields for selecting the clock source and dividers for various module clocks.

NOTE

The SIM registers can be written only in supervisor mode. In user mode, write accesses are blocked and will result in a bus error.

SIM memory map

Absolute address (hex)	Register name	Width (in bits)	Access	Reset value	Section/ page
4004_8004	System Options Register 2 (SIM_SOPT2)	32	R/W	0000_0000h	12.2.1/146
4004_800C	System Options Register 4 (SIM_SOPT4)	32	R/W	0000_0000h	12.2.2/147
4004_8010	System Options Register 5 (SIM_SOPT5)	32	R/W	0000_0000h	12.2.3/149
4004_8018	System Options Register 7 (SIM_SOPT7)	32	R/W	0000_0000h	12.2.4/150
4004_8024	System Device Identification Register (SIM_SDID)	32	R	See section	12.2.5/151
4004_8034	System Clock Gating Control Register 4 (SIM_SCGC4)	32	R/W	E000_0030h	12.2.6/153
4004_8038	System Clock Gating Control Register 5 (SIM_SCGC5)	32	R/W	0000_0180h	12.2.7/155
4004_803C	System Clock Gating Control Register 6 (SIM_SCGC6)	32	R/W	0000_0001h	12.2.8/156
4004_8044	System Clock Divider Register 1 (SIM_CLKDIV1)	32	R/W	See section	12.2.9/157
4004_804C	Flash Configuration Register 1 (SIM_FCFG1)	32	R/W	See section	12.2.10/159
4004_8050	Flash Configuration Register 2 (SIM_FCFG2)	32	R	See section	12.2.11/160
4004_8058	Unique Identification Register Mid-High (SIM_UIDMH)	32	R	See section	12.2.12/161
4004_805C	Unique Identification Register Mid Low (SIM_UIDML)	32	R	See section	12.2.13/161
4004_8060	Unique Identification Register Low (SIM_UIDL)	32	R	See section	12.2.14/162
4004_8100	COP Control Register (SIM_COPC)	32	R/W	0000_000Ch	12.2.15/162
4004_8104	Service COP Register (SIM_SRVCOP)	32	W	0000_0000h	12.2.16/163

12.2.1 System Options Register 2 (SIM_SOPT2)

SOPT2 contains the controls for selecting many of the module clock source options on this device. See the Clock Distribution chapter for more information including clocking diagrams and definitions of device clocks.

Address: 4004_7000h base + 1004h offset = 4004_8004h

Bit	31	30	29	28	27	26	25	24	23	22	21	20	19	18	17	16
R	0				UART0SRC		TPMSRC		0						0	
W																
Reset	0	0	0	0	0	0	0	0	0	0	0	0	0	0	0	0

Bit	15	14	13	12	11	10	9	8	7	6	5	4	3	2	1	0
R	0															
W																
Reset	0	0	0	0	0	0	0	0	0	0	0	0	0	0	0	0

SIM_SOPT2 field descriptions

Field	Description
31–28 Reserved	This field is reserved. This read-only field is reserved and always has the value 0.

Table continues on the next page...

SIM_SOPT2 field descriptions (continued)

Field	Description
27–26 UART0SRC	UART0 Clock Source Select Selects the clock source for the UART0 transmit and receive clock. 00 Clock disabled 01 MCGFLLCLK clock 10 OSCERCLK clock 11 MCGIRCLK clock
25–24 TPMSRC	TPM Clock Source Select Selects the clock source for the TPM counter clock 00 Clock disabled 01 MCGFLLCLK clock 10 OSCERCLK clock 11 MCGIRCLK clock
23–18 Reserved	This field is reserved. This read-only field is reserved and always has the value 0.
17–16 Reserved	This field is reserved. This read-only field is reserved and always has the value 0.
Reserved	This field is reserved. This read-only field is reserved and always has the value 0.

12.2.2 System Options Register 4 (SIM_SOPT4)

Address: 4004_7000h base + 100Ch offset = 4004_800Ch

Bit	31	30	29	28	27	26	25	24	23	22	21	20	19	18	17	16
R	0					0	TPM1CLKSEL	TPM0CLKSEL	0			0	0	TPM1CH0SRC	0	
W																
Reset	0	0	0	0	0	0	0	0	0	0	0	0	0	0	0	0

Bit	15	14	13	12	11	10	9	8	7	6	5	4	3	2	1	0
R	0															
W																
Reset	0	0	0	0	0	0	0	0	0	0	0	0	0	0	0	0

SIM_SOPT4 field descriptions

Field	Description
31–27 Reserved	This field is reserved. This read-only field is reserved and always has the value 0.
26 Reserved	This field is reserved. This read-only field is reserved and always has the value 0.
25 TPM1CLKSEL	TPM1 External Clock Pin Select Selects the external pin used to drive the clock to the TPM1 module. **NOTE:** The selected pin must also be configured for the TPM external clock function through the appropriate pin control register in the port control module. 0 TPM1 external clock driven by TPM_CLKIN0 pin. 1 TPM1 external clock driven by TPM_CLKIN1 pin.
24 TPM0CLKSEL	TPM0 External Clock Pin Select Selects the external pin used to drive the clock to the TPM0 module. **NOTE:** The selected pin must also be configured for the TPM external clock function through the appropriate pin control register in the port control module. 0 TPM0 external clock driven by TPM_CLKIN0 pin. 1 TPM0 external clock driven by TPM_CLKIN1 pin.
23–21 Reserved	This field is reserved. This read-only field is reserved and always has the value 0.
20 Reserved	This field is reserved. This read-only field is reserved and always has the value 0.
19 Reserved	This field is reserved. This read-only field is reserved and always has the value 0.
18 TPM1CH0SRC	TPM1 channel 0 input capture source select Selects the source for TPM1 channel 0 input capture. **NOTE:** When TPM1 is not in input capture mode, clear this field. 0 TPM1_CH0 signal 1 CMP0 output
Reserved	This field is reserved. This read-only field is reserved and always has the value 0.

12.2.3 System Options Register 5 (SIM_SOPT5)

Address: 4004_7000h base + 1010h offset = 4004_8010h

Bit	31	30	29	28	27	26	25	24	23	22	21	20	19	18	17	16
R	0												0	0	0	UART0ODE
W																
Reset	0	0	0	0	0	0	0	0	0	0	0	0	0	0	0	0

Bit	15	14	13	12	11	10	9	8	7	6	5	4	3	2	1	0
R	0									0			0	UART0RXSRC	0	UART0TXSRC
W																
Reset	0	0	0	0	0	0	0	0	0	0	0	0	0	0	0	0

SIM_SOPT5 field descriptions

Field	Description
31–20 Reserved	This field is reserved. This read-only field is reserved and always has the value 0.
19 Reserved	This field is reserved. This read-only field is reserved and always has the value 0.
18 Reserved	This field is reserved. This read-only field is reserved and always has the value 0.
17 Reserved	This field is reserved. This read-only field is reserved and always has the value 0.
16 UART0ODE	UART0 Open Drain Enable 0 Open drain is disabled on UART0 1 Open drain is enabled on UART0.
15–7 Reserved	This field is reserved. This read-only field is reserved and always has the value 0.
6–4 Reserved	This field is reserved. This read-only field is reserved and always has the value 0.
3 Reserved	This field is reserved. This read-only field is reserved and always has the value 0.
2 UART0RXSRC	UART0 Receive Data Source Select Selects the source for the UART0 receive data. 0 UART0_RX pin 1 CMP0 output
1 Reserved	This field is reserved. This read-only field is reserved and always has the value 0.

Table continues on the next page...

SIM_SOPT5 field descriptions (continued)

Field	Description
0 UART0TXSRC	UART0 transmit data source select Selects the source for the UART0 transmit data. 0 UART0_TX pin 1 UART0_TX pin modulated with TPM1 channel 0 output

12.2.4 System Options Register 7 (SIM_SOPT7)

Address: 4004_7000h base + 1018h offset = 4004_8018h

Bit	31	30	29	28	27	26	25	24	23	22	21	20	19	18	17	16
R	0															
W																
Reset	0	0	0	0	0	0	0	0	0	0	0	0	0	0	0	0

Bit	15	14	13	12	11	10	9	8	7	6	5	4	3	2	1	0
R	0								ADC0ALTTRGEN	0		ADC0PRETRGSEL	ADC0TRGSEL			
W																
Reset	0	0	0	0	0	0	0	0	0	0	0	0	0	0	0	0

SIM_SOPT7 field descriptions

Field	Description
31–8 Reserved	This field is reserved. This read-only field is reserved and always has the value 0.
7 ADC0ALTTRGEN	ADC0 Alternate Trigger Enable Enables alternative conversion triggers for ADC0. 0 TPM1 channel 0 (A) and channel 1 (B) triggers selected for ADC0. 1 Alternate trigger selected for ADC0.
6–5 Reserved	This field is reserved. This read-only field is reserved and always has the value 0.
4 ADC0PRETRGSEL	ADC0 Pretrigger Select Selects the ADC0 pre-trigger source when alternative triggers are enabled through ADC0ALTTRGEN. 0 Pre-trigger A 1 Pre-trigger B

Table continues on the next page...

SIM_SOPT7 field descriptions (continued)

Field	Description
ADC0TRGSEL	ADC0 trigger select Selects the ADC0 trigger source when alternative triggers are functional in stop and VLPS modes. . 0000 External trigger pin input (EXTRG_IN) 0001 CMP0 output 0010 Reserved 0011 Reserved 0100 Reserved 0101 Reserved 0110 Reserved 0111 Reserved 1000 TPM0 overflow 1001 TPM1 overflow 1010 Reserved 1011 Reserved 1100 Reserved 1101 Reserved 1110 LPTMR0 trigger 1111 Reserved

12.2.5 System Device Identification Register (SIM_SDID)

Address: 4004_7000h base + 1024h offset = 4004_8024h

Bit	31	30	29	28	27	26	25	24	23	22	21	20	19	18	17	16	15	14	13	12	11	10	9	8	7	6	5	4	3	2	1	0
R	FAMID				SUBFAMID				SERIESID				SRAMSIZE				REVID				DIEID					0			PINID			
W																																
Reset	*	*	*	*	*	*	*	*	0	0	0	1	*	*	*	*	*	*	*	*	0	1	1	0	0	0	0	0	*	*	*	*

* Notes:
- FAMID field: Device specific value.
- SUBFAMID field: Device specific value.
- SRAMSIZE field: Device specific value.
- REVID field: Device specific value.
- PINID field: Device specific value.

SIM_SDID field descriptions

Field	Description
31–28 FAMID	Kinetis family ID Specifies the Kinetis family of the device. 0000 KL0x Family (low end) 0001 KL1x Family (basic) 0010 KL2x Family (USB)

Table continues on the next page...

SIM_SDID field descriptions (continued)

Field	Description
	0011 KL3x Family (Segment LCD) 0100 KL4x Family (USB and Segment LCD)
27–24 SUBFAMID	Kinetis Sub-Family ID Specifies the Kinetis sub-family of the device. 0010 KLx2 Subfamily (low end) 0100 KLx4 Subfamily (basic analog) 0101 KLx5 Subfamily (advanced analog) 0110 KLx6 Subfamily (advanced analog with I2S) 0111 KLx7 Subfamily (advanced analog with I2S and extended RAM)
23–20 SERIESID	Kinetis Series ID Specifies the Kinetis family of the device. 0001 KL family
19–16 SRAMSIZE	System SRAM Size Specifies the size of the System SRAM 0000 0.5 KB 0001 1 KB 0010 2 KB 0011 4 KB 0100 8 KB 0101 16 KB 0110 32 KB 0111 64 KB
15–12 REVID	Device Revision Number Specifies the silicon implementation number for the device.
11–7 DIEID	Device Die Number Specifies the silicon implementation number for the device.
6–4 Reserved	This field is reserved. This read-only field is reserved and always has the value 0.
PINID	Pincount Identification Specifies the pincount of the device. 0000 16-pin 0001 24-pin 0010 32-pin 0011 36-pin 0100 48-pin 0101 64-pin 0110 80-pin 0111 Reserved 1000 100-pin 1001 Reserved

Table continues on the next page...

SIM_SDID field descriptions (continued)

Field	Description
	1010 Reserved 1011 Custom pinout (WLCSP) 1100 Reserved 1101 Reserved 1110 Reserved 1111 Reserved

12.2.6 System Clock Gating Control Register 4 (SIM_SCGC4)

Address: 4004_7000h base + 1034h offset = 4004_8034h

Bit	31	30	29	28	27	26	25	24	23	22	21	20	19	18	17	16
R	1			0					0	SPI0	0		CMP	0	0	
W																
Reset	1	1	1	0	0	0	0	0	0	0	0	0	0	0	0	0

Bit	15	14	13	12	11	10	9	8	7	6	5	4	3	2	1	0
R	0		0	0	0	UART0	0		I2C1	I2C0	1		0			
W																
Reset	0	0	0	0	0	0	0	0	0	0	1	1	0	0	0	0

SIM_SCGC4 field descriptions

Field	Description
31–29 Reserved	This field is reserved. This read-only field is reserved and always has the value 1.
28–24 Reserved	This field is reserved. This read-only field is reserved and always has the value 0.
23 Reserved	This field is reserved. This read-only field is reserved and always has the value 0.
22 SPI0	SPI0 Clock Gate Control Controls the clock gate to the SPI0 module. 0 Clock disabled 1 Clock enabled
21–20 Reserved	This field is reserved. This read-only field is reserved and always has the value 0.
19 CMP	Comparator Clock Gate Control Controls the clock gate to the comparator module.

Table continues on the next page...

SIM_SCGC4 field descriptions (continued)

Field	Description
	0 Clock disabled 1 Clock enabled
18 Reserved	This field is reserved. This read-only field is reserved and always has the value 0.
17–14 Reserved	This field is reserved. This read-only field is reserved and always has the value 0.
13 Reserved	This field is reserved. This read-only field is reserved and always has the value 0.
12 Reserved	This field is reserved. This read-only field is reserved and always has the value 0.
11 Reserved	This field is reserved. This read-only field is reserved and always has the value 0.
10 UART0	UART0 Clock Gate Control Controls the clock gate to the UART0 module. 0 Clock disabled 1 Clock enabled
9–8 Reserved	This field is reserved. This read-only field is reserved and always has the value 0.
7 I2C1	I2C1 Clock Gate Control This bit controls the clock gate to the I^2C1 module. 0 Clock disabled 1 Clock enabled
6 I2C0	I2C0 Clock Gate Control This bit controls the clock gate to the I^2C0 module. 0 Clock disabled 1 Clock enabled
5–4 Reserved	This field is reserved. This read-only field is reserved and always has the value 1.
Reserved	This field is reserved. This read-only field is reserved and always has the value 0.

12.2.7 System Clock Gating Control Register 5 (SIM_SCGC5)

Address: 4004_7000h base + 1038h offset = 4004_8038h

Bit	31	30	29	28	27	26	25	24	23	22	21	20	19	18	17	16
R	0												0	0		
W																
Reset	0	0	0	0	0	0	0	0	0	0	0	0	0	0	0	0

Bit	15	14	13	12	11	10	9	8	7	6	5	4	3	2	1	0
R	0		0			PORTB	PORTA	1		0	0	0			0	LPTMR
W																
Reset	0	0	0	0	0	0	0	1	1	0	0	0	0	0	0	0

SIM_SCGC5 field descriptions

Field	Description
31–20 Reserved	This field is reserved. This read-only field is reserved and always has the value 0.
19 Reserved	This field is reserved. This read-only field is reserved and always has the value 0.
18–14 Reserved	This field is reserved. This read-only field is reserved and always has the value 0.
13–11 Reserved	This field is reserved. This read-only field is reserved and always has the value 0.
10 PORTB	Port B Clock Gate Control Controls the clock gate to the Port B module. 0 Clock disabled 1 Clock enabled
9 PORTA	Port A Clock Gate Control Controls the clock gate to the Port A module. 0 Clock disabled 1 Clock enabled
8–7 Reserved	This field is reserved. This read-only field is reserved and always has the value 1.
6 Reserved	This field is reserved. This read-only field is reserved and always has the value 0.
5 Reserved	This field is reserved. This read-only field is reserved and always has the value 0.
4–2 Reserved	This field is reserved. This read-only field is reserved and always has the value 0.

Table continues on the next page...

SIM_SCGC5 field descriptions (continued)

Field	Description
1 Reserved	This field is reserved. This read-only field is reserved and always has the value 0.
0 LPTMR	Low Power Timer Access Control This bit controls software access to the Low Power Timer module. 0 Access disabled 1 Access enabled

12.2.8 System Clock Gating Control Register 6 (SIM_SCGC6)

Address: 4004_7000h base + 103Ch offset = 4004_803Ch

Bit	31	30	29	28	27	26	25	24	23	22	21	20	19	18	17	16
R	0	0	0	0	ADC0	0	TPM1	TPM0	0	0						
W																
Reset	0	0	0	0	0	0	0	0	0	0	0	0	0	0	0	0

Bit	15	14	13	12	11	10	9	8	7	6	5	4	3	2	1	0
R	0	0													0	FTF
W																
Reset	0	0	0	0	0	0	0	0	0	0	0	0	0	0	0	1

SIM_SCGC6 field descriptions

Field	Description
31 Reserved	This field is reserved. This read-only field is reserved and always has the value 0.
30 Reserved	This field is reserved. This read-only field is reserved and always has the value 0.
29 Reserved	This field is reserved. This read-only field is reserved and always has the value 0.
28 Reserved	This field is reserved. This read-only field is reserved and always has the value 0.
27 ADC0	ADC0 Clock Gate Control Controls the clock gate to the ADC0 module. 0 Clock disabled 1 Clock enabled
26 Reserved	This field is reserved. This read-only field is reserved and always has the value 0.

Table continues on the next page...

SIM_SCGC6 field descriptions (continued)

Field	Description
25 TPM1	TPM1 Clock Gate Control Controls the clock gate to the TPM1 module. 0 Clock disabled 1 Clock enabled
24 TPM0	TPM0 Clock Gate Control Controls the clock gate to the TPM0 module. 0 Clock disabled 1 Clock enabled
23 Reserved	This field is reserved. This read-only field is reserved and always has the value 0.
22–16 Reserved	This field is reserved. This read-only field is reserved and always has the value 0.
15 Reserved	This field is reserved. This read-only field is reserved and always has the value 0.
14–2 Reserved	This field is reserved. This read-only field is reserved and always has the value 0.
1 Reserved	This field is reserved. This read-only field is reserved and always has the value 0.
0 FTF	Flash Memory Clock Gate Control Controls the clock gate to the flash memory. Flash reads are still supported while the flash memory is clock gated, but entry into low power modes is blocked. 0 Clock disabled 1 Clock enabled

12.2.9 System Clock Divider Register 1 (SIM_CLKDIV1)

NOTE

The CLKDIV1 register cannot be written to when the device is in VLPR mode.

NOTE

Reset value loaded during System Reset from FTFA_FOPT[LPBOOT] (See Table 6-2).

Address: 4004_7000h base + 1044h offset = 4004_8044h

Bit	31	30	29	28	27	26	25	24	23	22	21	20	19	18	17	16	15	14	13	12	11	10	9	8	7	6	5	4	3	2	1	0
R	OUTDIV1				0									OUTDIV4			0															
W																																
Reset	*	*	*	*	0	0	0	0	0	0	0	0	0	0	0	1	0	0	0	0	0	0	0	0	0	0	0	0	0	0	0	0

* Notes:

- OUTDIV1 field: The reset value depends on the FTFA_FOPT[LPBOOT]. It is loaded with 0000 (divide by 1), 0001 (divide by 2), 0011 (divide by 4, or 0111 (divide by 8).

SIM_CLKDIV1 field descriptions

Field	Description
31–28 OUTDIV1	Clock 1 Output Divider value Sets the divide value for the core/system clock, as well as the bus/flash clocks. At the end of reset, it is loaded with 0000 (divide by one), 0001 (divide by two), 0011 (divide by four), or 0111 (divide by eight) depending on the setting of the FTFA_FOPT[LPBOOT] (See Table 6-2). 0000 Divide-by-1. 0001 Divide-by-2. 0010 Divide-by-3. 0011 Divide-by-4. 0100 Divide-by-5. 0101 Divide-by-6. 0110 Divide-by-7. 0111 Divide-by-8. 1000 Divide-by-9. 1001 Divide-by-10. 1010 Divide-by-11. 1011 Divide-by-12. 1100 Divide-by-13. 1101 Divide-by-14. 1110 Divide-by-15. 1111 Divide-by-16.
27–19 Reserved	This field is reserved. This read-only field is reserved and always has the value 0.
18–16 OUTDIV4	Clock 4 Output Divider value Sets the divide value for the bus and flash clock and is in addition to the System clock divide ratio. At the end of reset, it is loaded with 0001 (divide by two). 000 Divide-by-1. 001 Divide-by-2. 010 Divide-by-3. 011 Divide-by-4. 100 Divide-by-5. 101 Divide-by-6. 110 Divide-by-7. 111 Divide-by-8.
Reserved	This field is reserved. This read-only field is reserved and always has the value 0.

12.2.10 Flash Configuration Register 1 (SIM_FCFG1)

Address: 4004_7000h base + 104Ch offset = 4004_804Ch

Bit	31	30	29	28	27	26	25	24	23	22	21	20	19	18	17	16
R	0				PFSIZE				0							
W																
Reset	0	0	0	0	*	*	*	*	0	0	0	0	0	0	0	0

Bit	15	14	13	12	11	10	9	8	7	6	5	4	3	2	1	0
R	0														FLASHDOZE	FLASHDIS
W																
Reset	0	0	0	0	0	0	0	0	0	0	0	0	0	0	0	0

* Notes:
- PFSIZE field: Device specific value.

SIM_FCFG1 field descriptions

Field	Description
31–28 Reserved	This field is reserved. This read-only field is reserved and always has the value 0.
27–24 PFSIZE	Program Flash Size Specifies the amount of program flash memory available on the device . Undefined values are reserved. 0000 8 KB of program flash memory, 0.25 KB protection region 0001 16 KB of program flash memory, 0.5 KB protection region 0011 32 KB of program flash memory, 1 KB protection region 0101 64 KB of program flash memory, 2 KB protection region 0111 128 KB of program flash memory, 4 KB protection region 1001 256 KB of program flash memory, 8 KB protection region 1111 32 KB of program flash memory, 1 KB protection region

Table continues on the next page...

SIM_FCFG1 field descriptions (continued)

Field	Description
23–2 Reserved	This field is reserved. This read-only field is reserved and always has the value 0.
1 FLASHDOZE	Flash Doze When set, flash memory is disabled for the duration of Doze mode. This field must be clear during VLP modes. The flash will be automatically enabled again at the end of Doze mode so interrupt vectors do not need to be relocated out of flash memory. The wake-up time from Doze mode is extended when this field is set. 0 Flash remains enabled during Doze mode. 1 Flash is disabled for the duration of Doze mode.
0 FLASHDIS	Flash Disable Flash accesses are disabled (and generate a bus error) and the flash memory is placed in a low-power state. This field should not be changed during VLP modes. Relocate the interrupt vectors out of Flash memory before disabling the Flash. 0 Flash is enabled. 1 Flash is disabled.

12.2.11 Flash Configuration Register 2 (SIM_FCFG2)

Address: 4004_7000h base + 1050h offset = 4004_8050h

Bit	31	30	29	28	27	26	25	24	23	22	21	20	19	18	17	16
R	0	MAXADDR0							1	0						
W																
Reset	0	*	*	*	*	*	*	*	1	0	0	0	0	0	0	0

Bit	15	14	13	12	11	10	9	8	7	6	5	4	3	2	1	0
R	0															
W																
Reset	0	0	0	0	0	0	0	0	0	0	0	0	0	0	0	0

* Notes:
- MAXADDR0 field: Device specific value indicating amount of implemented flash.

SIM_FCFG2 field descriptions

Field	Description
31 Reserved	This field is reserved. This read-only field is reserved and always has the value 0.
30–24 MAXADDR0	Max address block This field concatenated with leading zeros indicates the first invalid address of program flash.

Table continues on the next page...

SIM_FCFG2 field descriptions (continued)

Field	Description
	For example, if MAXADDR0 = 0x10 the first invalid address of program flash is 0x0002_0000. This would be the MAXADDR0 value for a device with 128 KB program flash.
23 Reserved	This field is reserved. This read-only field is reserved and always has the value 1.
22–16 Reserved	This field is reserved. This read-only field is reserved and always has the value 0.
Reserved	This field is reserved. This read-only field is reserved and always has the value 0.

12.2.12 Unique Identification Register Mid-High (SIM_UIDMH)

Address: 4004_7000h base + 1058h offset = 4004_8058h

Bit	31	30	29	28	27	26	25	24	23	22	21	20	19	18	17	16	15	14	13	12	11	10	9	8	7	6	5	4	3	2	1	0
R	0																UID															
W																																
Reset	0	0	0	0	0	0	0	0	0	0	0	0	0	0	0	0	*	*	*	*	*	*	*	*	*	*	*	*	*	*	*	*

* Notes:
- UID field: Device specific value.

SIM_UIDMH field descriptions

Field	Description
31–16 Reserved	This field is reserved. This read-only field is reserved and always has the value 0.
UID	Unique Identification Unique identification for the device.

12.2.13 Unique Identification Register Mid Low (SIM_UIDML)

Address: 4004_7000h base + 105Ch offset = 4004_805Ch

Bit	31	30	29	28	27	26	25	24	23	22	21	20	19	18	17	16	15	14	13	12	11	10	9	8	7	6	5	4	3	2	1	0
R	UID																															
W																																
Reset	*	*	*	*	*	*	*	*	*	*	*	*	*	*	*	*	*	*	*	*	*	*	*	*	*	*	*	*	*	*	*	*

* Notes:
- UID field: Device specific value.

SIM_UIDML field descriptions

Field	Description
UID	Unique Identification Unique identification for the device.

12.2.14 Unique Identification Register Low (SIM_UIDL)

Address: 4004_7000h base + 1060h offset = 4004_8060h

Bit	31	30	29	28	27	26	25	24	23	22	21	20	19	18	17	16	15	14	13	12	11	10	9	8	7	6	5	4	3	2	1	0
R	UID																															
W																																
Reset	*	*	*	*	*	*	*	*	*	*	*	*	*	*	*	*	*	*	*	*	*	*	*	*	*	*	*	*	*	*	*	*

* Notes:
- UID field: Device specific value.

SIM_UIDL field descriptions

Field	Description
UID	Unique Identification Unique identification for the device.

12.2.15 COP Control Register (SIM_COPC)

All of the bits in this register can be written only once after a reset.

Address: 4004_7000h base + 1100h offset = 4004_8100h

Bit	31	30	29	28	27	26	25	24	23	22	21	20	19	18	17	16
R	0															
W																
Reset	0	0	0	0	0	0	0	0	0	0	0	0	0	0	0	0

Bit	15	14	13	12	11	10	9	8	7	6	5	4	3	2	1	0
R	0												COPT		COPCLKS	COPW
W																
Reset	0	0	0	0	0	0	0	0	0	0	0	0	1	1	0	0

SIM_COPC field descriptions

Field	Description
31–4 Reserved	This field is reserved. This read-only field is reserved and always has the value 0.
3–2 COPT	COP Watchdog Timeout This write-once field selects the timeout period of the COP. COPT along with the COPCLKS field define the COP timeout period. 00 COP disabled 01 COP timeout after 2^5 LPO cycles or 2^{13} bus clock cycles 10 COP timeout after 2^8 LPO cycles or 2^{16} bus clock cycles 11 COP timeout after 2^{10} LPO cycles or 2^{18} bus clock cycles
1 COPCLKS	COP Clock Select This write-once field selects the clock source of the COP watchdog. 0 Internal 1 kHz clock is source to COP. 1 Bus clock is source to COP.
0 COPW	COP Windowed Mode Windowed mode is supported only when COP is running from the bus clock. The COP window is opened three quarters through the timeout period. 0 Normal mode 1 Windowed mode

12.2.16 Service COP Register (SIM_SRVCOP)

Address: 4004_7000h base + 1104h offset = 4004_8104h

Bit	31	30	29	28	27	26	25	24	23	22	21	20	19	18	17	16	15	14	13	12	11	10	9	8	7	6	5	4	3	2	1	0
R																																
W	Reserved																								SRVCOP							
Reset	0	0	0	0	0	0	0	0	0	0	0	0	0	0	0	0	0	0	0	0	0	0	0	0	0	0	0	0	0	0	0	0

SIM_SRVCOP field descriptions

Field	Description
31–8 Reserved	This field is reserved.
SRVCOP	Service COP Register Write 0x55 and then 0xAA (in that order) to reset the COP timeout counter.

12.3 Functional description

See Introduction section.

Chapter 13
System Mode Controller (SMC)

13.1 Introduction

NOTE

For the chip-specific implementation details of this module's instances, see the chip configuration information.

The System Mode Controller (SMC) is responsible for sequencing the system into and out of all low-power Stop and Run modes. Specifically, it monitors events to trigger transitions between power modes while controlling the power, clocks, and memories of the system to achieve the power consumption and functionality of that mode.

This chapter describes all the available low-power modes, the sequence followed to enter/exit each mode, and the functionality available while in each of the modes.

The SMC is able to function during even the deepest low power modes.

13.2 Modes of operation

The ARM CPU has three primary modes of operation:

- Run
- Sleep
- Deep Sleep

The WFI or WFE instruction is used to invoke Sleep and Deep Sleep modes. Run, Wait, and Stop are the common terms used for the primary operating modes of Freescale microcontrollers. The following table shows the translation between the ARM CPU modes and the Freescale MCU power modes.

ARM CPU mode	MCU mode
Sleep	Wait
Deep Sleep	Stop

Accordingly, the ARM CPU documentation refers to sleep and deep sleep, while the Freescale MCU documentation normally uses wait and stop.

In addition, Freescale MCUs also augment Stop, Wait, and Run modes in a number of ways. The power management controller (PMC) contains a run and a stop mode regulator. Run regulation is used in normal run, wait and stop modes. Stop mode regulation is used during all very low power and low leakage modes. During stop mode regulation, the bus frequencies are limited in the very low power modes.

The SMC provides the user with multiple power options. The Very Low Power Run (VLPR) mode can drastically reduce run time power when maximum bus frequency is not required to handle the application needs. From Normal Run mode, the Run Mode (RUNM) field can be modified to change the MCU into VLPR mode when limited frequency is sufficient for the application. From VLPR mode, a corresponding wait (VLPW) and stop (VLPS) mode can be entered.

Depending on the needs of the user application, a variety of stop modes are available that allow the state retention, partial power down or full power down of certain logic and/or memory. I/O states are held in all modes of operation. Several registers are used to configure the various modes of operation for the device.

The following table describes the power modes available for the device.

Table 13-1. Power modes

Mode	Description
RUN	The MCU can be run at full speed and the internal supply is fully regulated, that is, in run regulation. This mode is also referred to as Normal Run mode.
WAIT	The core clock is gated off. The system clock continues to operate. Bus clocks, if enabled, continue to operate. Run regulation is maintained.
STOP	The core clock is gated off. System clocks to other masters and bus clocks are gated off after all stop acknowledge signals from supporting peripherals are valid.
VLPR	The core, system, bus, and flash clock maximum frequencies are restricted in this mode. See the Power Management chapter for details about the maximum allowable frequencies.
VLPW	The core clock is gated off. The system, bus, and flash clocks continue to operate, although their maximum frequency is restricted. See the Power Management chapter for details on the maximum allowable frequencies.
VLPS	The core clock is gated off. System clocks to other masters and bus clocks are gated off after all stop acknowledge signals from supporting peripherals are valid.
VLLS3	The core clock is gated off. System clocks to other masters and bus clocks are gated off after all stop acknowledge signals from supporting peripherals are valid. The MCU is placed in a low

Table continues on the next page...

Table 13-1. Power modes (continued)

Mode	Description
	leakage mode by powering down the internal logic. All system RAM contents are retained and I/O states are held. Internal logic states are not retained.
VLLS1	The core clock is gated off. System clocks to other masters and bus clocks are gated off after all stop acknowledge signals from supporting peripherals are valid. The MCU is placed in a low leakage mode by powering down the internal logic and all system RAM. I/O states are held. Internal logic states are not retained.
VLLS0	The core clock is gated off. System clocks to other masters and bus clocks are gated off after all stop acknowledge signals from supporting peripherals are valid. The MCU is placed in a low leakage mode by powering down the internal logic and all system RAM. I/O states are held. Internal logic states are not retained. The 1kHz LPO clock is disabled and the power on reset (POR) circuit can be optionally enabled using STOPCTRL[PORPO].

13.3 Memory map and register descriptions

Details follow about the registers related to the system mode controller.

Different SMC registers reset on different reset types. Each register's description provides details. For more information about the types of reset on this chip, refer to the Reset section details.

NOTE

The SMC registers can be written only in supervisor mode. Write accesses in user mode are blocked and will result in a bus error.

SMC memory map

Absolute address (hex)	Register name	Width (in bits)	Access	Reset value	Section/ page
4007_E000	Power Mode Protection register (SMC_PMPROT)	8	R/W	00h	13.3.1/167
4007_E001	Power Mode Control register (SMC_PMCTRL)	8	R/W	00h	13.3.2/169
4007_E002	Stop Control Register (SMC_STOPCTRL)	8	R/W	03h	13.3.3/170
4007_E003	Power Mode Status register (SMC_PMSTAT)	8	R	01h	13.3.4/171

13.3.1 Power Mode Protection register (SMC_PMPROT)

This register provides protection for entry into any low-power run or stop mode. The enabling of the low-power run or stop mode occurs by configuring the Power Mode Control register (PMCTRL).

The PMPROT register can be written only once after any system reset.

If the MCU is configured for a disallowed or reserved power mode, the MCU remains in its current power mode. For example, if the MCU is in normal RUN mode and AVLP is 0, an attempt to enter VLPR mode using PMCTRL[RUNM] is blocked and the RUNM bits remain 00b, indicating the MCU is still in Normal Run mode.

NOTE

This register is reset on Chip Reset not VLLS and by reset types that trigger Chip Reset not VLLS. It is unaffected by reset types that do not trigger Chip Reset not VLLS. See the Reset section details for more information.

Address: 4007_E000h base + 0h offset = 4007_E000h

Bit	7	6	5	4	3	2	1	0
Read	0	0	AVLP	0	0	0	AVLLS	0
Write								
Reset	0	0	0	0	0	0	0	0

SMC_PMPROT field descriptions

Field	Description
7 Reserved	This field is reserved. This read-only field is reserved and always has the value 0.
6 Reserved	This field is reserved. This read-only field is reserved and always has the value 0.
5 AVLP	Allow Very-Low-Power Modes Provided the appropriate control bits are set up in PMCTRL, this write-once bit allows the MCU to enter any very-low-power mode (VLPR, VLPW, and VLPS). 0 VLPR, VLPW and VLPS are not allowed 1 VLPR, VLPW and VLPS are allowed
4 Reserved	This field is reserved. This read-only field is reserved and always has the value 0.
3 Reserved	This field is reserved. This read-only field is reserved and always has the value 0.
2 Reserved	This field is reserved. This read-only field is reserved and always has the value 0.
1 AVLLS	Allow Very-Low-Leakage Stop Mode Provided the appropriate control bits are set up in PMCTRL, this write once bit allows the MCU to enter any very-low-leakage stop mode (VLLSx). 0 Any VLLSx mode is not allowed 1 Any VLLSx mode is allowed
0 Reserved	This field is reserved. This read-only field is reserved and always has the value 0.

13.3.2 Power Mode Control register (SMC_PMCTRL)

The PMCTRL register controls entry into low-power run and stop modes, provided that the selected power mode is allowed via an appropriate setting of the protection (PMPROT) register.

NOTE

This register is reset on Chip POR not VLLS and by reset types that trigger Chip POR not VLLS. It is unaffected by reset types that do not trigger Chip POR not VLLS. See the Reset section details for more information.

Address: 4007_E000h base + 1h offset = 4007_E001h

Bit	7	6	5	4	3	2	1	0
Read	Reserved	RUNM		0	STOPA	STOPM		
Write								
Reset	0	0	0	0	0	0	0	0

SMC_PMCTRL field descriptions

Field	Description
7 Reserved	Reserved. This field is reserved. This bit is reserved for future expansion and should always be written zero for deterministic operation.
6–5 RUNM	Run Mode Control When written, causes entry into the selected run mode. Writes to this field are blocked if the protection level has not been enabled using the PMPROT register. This field is cleared by hardware on any exit to normal RUN mode. **NOTE:** RUNM may be set to VLPR only when PMSTAT=RUN. After being written to VLPR, RUNM should not be written back to RUN until PMSTAT=VLPR. 00 Normal Run mode (RUN) 01 Reserved 10 Very-Low-Power Run mode (VLPR) 11 Reserved
4 Reserved	This field is reserved. This read-only field is reserved and always has the value 0.
3 STOPA	Stop Aborted When set, this read-only status bit indicates an interrupt or reset occured during the previous stop mode entry sequence, preventing the system from entering that mode. This bit is cleared by hardware at the beginning of any stop mode entry sequence and is set if the sequence was aborted. 0 The previous stop mode entry was successsful. 1 The previous stop mode entry was aborted.

Table continues on the next page...

SMC_PMCTRL field descriptions (continued)

Field	Description
STOPM	Stop Mode Control When written, controls entry into the selected stop mode when Sleep-Now or Sleep-On-Exit mode is entered with SLEEPDEEP=1 . Writes to this field are blocked if the protection level has not been enabled using the PMPROT register. After any system reset, this field is cleared by hardware on any successful write to the PMPROT register. **NOTE:** When set to VLLSx, the VLLSM bits in the STOPCTRL register is used to further select the particular VLLS submode which will be entered. **NOTE:** When set to STOP, the PSTOPO bits in the STOPCTRL register can be used to select a Partial Stop mode if desired. 000 Normal Stop (STOP) 001 Reserved 010 Very-Low-Power Stop (VLPS) 011 Reserved 100 Very-Low-Leakage Stop (VLLSx) 101 Reserved 110 Reseved 111 Reserved

13.3.3 Stop Control Register (SMC_STOPCTRL)

The STOPCTRL register provides various control bits allowing the user to fine tune power consumption during the stop mode selected by the STOPM field.

NOTE

This register is reset on Chip POR not VLLS and by reset types that trigger Chip POR not VLLS. It is unaffected by reset types that do not trigger Chip POR not VLLS. See the Reset section details for more information.

Address: 4007_E000h base + 2h offset = 4007_E002h

Bit	7	6	5	4	3	2	1	0
Read Write	PSTOPO		PORPO	0	0	VLLSM		
Reset	0	0	0	0	0	0	1	1

SMC_STOPCTRL field descriptions

Field	Description
7–6 PSTOPO	Partial Stop Option These bits control whether a Partial Stop mode is entered when STOPM=STOP. When entering a Partial Stop mode from RUN mode, the PMC, MCG and flash remain fully powered, allowing the device to wakeup almost instantaneously at the expense of higher power consumption. In PSTOP2, only system

Table continues on the next page...

SMC_STOPCTRL field descriptions (continued)

Field	Description
	clocks are gated allowing peripherals running on bus clock to remain fully functional. In PSTOP1, both system and bus clocks are gated. 00 STOP - Normal Stop mode 01 PSTOP1 - Partial Stop with both system and bus clocks disabled 10 PSTOP2 - Partial Stop with system clock disabled and bus clock enabled 11 Reserved
5 PORPO	POR Power Option This bit controls whether the POR detect circuit is enabled in VLLS0 mode. 0 POR detect circuit is enabled in VLLS0 1 POR detect circuit is disabled in VLLS0
4 Reserved	This field is reserved. This read-only field is reserved and always has the value 0.
3 Reserved	This field is reserved. This read-only field is reserved and always has the value 0.
VLLSM	VLLS Mode Control This field controls which VLLS sub-mode to enter if STOPM=VLLSx. 000 VLLS0 001 VLLS1 010 Reserved 011 VLLS3 100 Reserved 101 Reserved 110 Reserved 111 Reserved

13.3.4 Power Mode Status register (SMC_PMSTAT)

PMSTAT is a read-only, one-hot register which indicates the current power mode of the system.

NOTE

This register is reset on Chip POR not VLLS and by reset types that trigger Chip POR not VLLS. It is unaffected by reset types that do not trigger Chip POR not VLLS. See the Reset section details for more information.

Address: 4007_E000h base + 3h offset = 4007_E003h

Bit	7	6	5	4	3	2	1	0
Read	0	PMSTAT						
Write								
Reset	0	0	0	0	0	0	0	1

SMC_PMSTAT field descriptions

Field	Description
7 Reserved	This field is reserved. This read-only field is reserved and always has the value 0.
PMSTAT	**NOTE:** When debug is enabled, the PMSTAT will not update to STOP or VLPS **NOTE:** When a PSTOP mode is enabled, the PMSTAT will not update to STOP or VLPS 000_0001 Current power mode is RUN 000_0010 Current power mode is STOP 000_0100 Current power mode is VLPR 000_1000 Current power mode is VLPW 001_0000 Current power mode is VLPS 010_0000 Reserved 100_0000 Current power mode is VLLS

13.4 Functional description

13.4.1 Power mode transitions

The following figure shows the power mode state transitions available on the chip. Any reset always brings the MCU back to the normal run state.

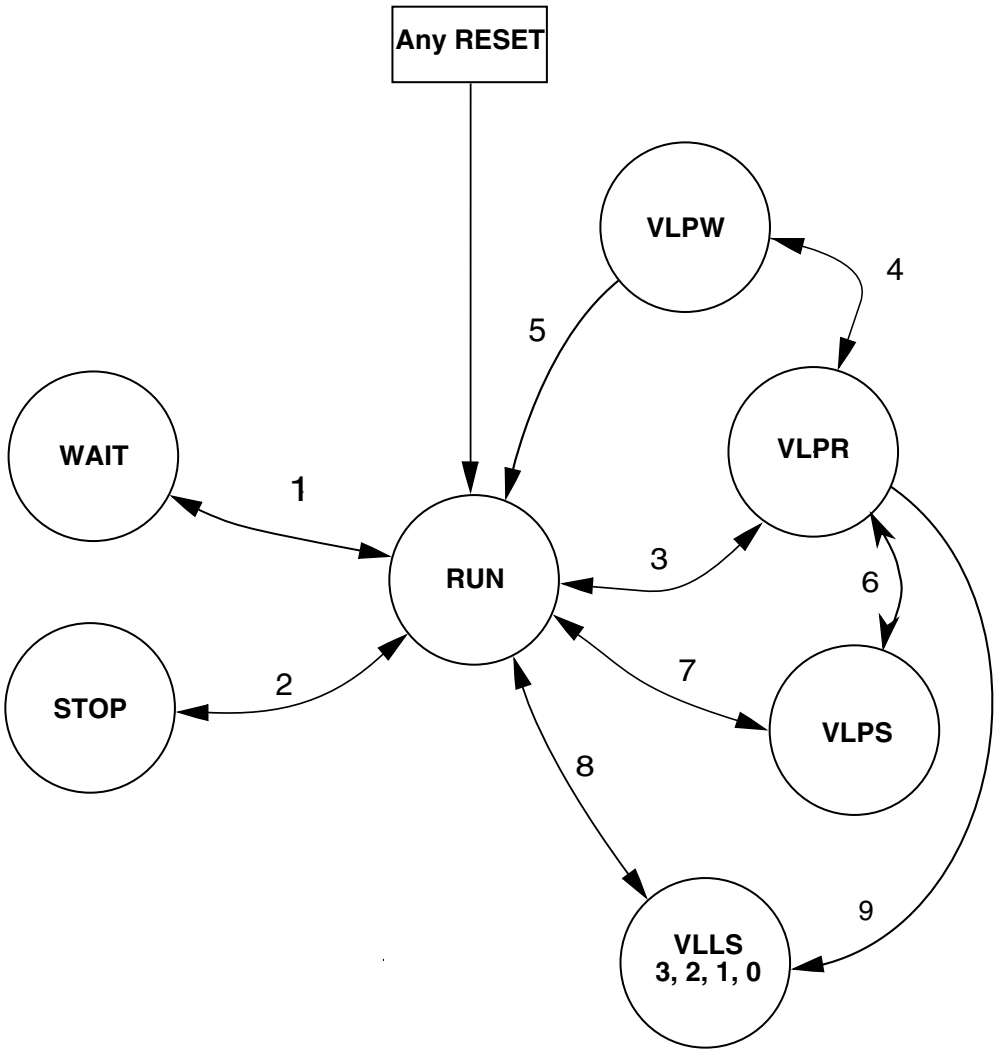

Figure 13-5. Power mode state diagram

The following table defines triggers for the various state transitions shown in the previous figure.

Table 13-7. Power mode transition triggers

Transition #	From	To	Trigger conditions
1	RUN	WAIT	Sleep-now or sleep-on-exit modes entered with SLEEPDEEP clear, controlled in System Control Register in ARM core. See note.[1]
	WAIT	RUN	Interrupt or Reset
2	RUN	STOP	PMCTRL[RUNM]=00, PMCTRL[STOPM]=000[2]

Table continues on the next page...

Table 13-7. Power mode transition triggers (continued)

Transition #	From	To	Trigger conditions
			Sleep-now or sleep-on-exit modes entered with SLEEPDEEP set, which is controlled in System Control Register in ARM core. See note.[1]
	STOP	RUN	Interrupt or Reset
3	RUN	VLPR	The core, system, bus and flash clock frequencies and MCG clocking mode are restricted in this mode. See the Power Management chapter for the maximum allowable frequencies and MCG modes supported. Set PMPROT[AVLP]=1, PMCTRL[RUNM]=10.
	VLPR	RUN	Set PMCTRL[RUNM]=00 or Reset.
4	VLPR	VLPW	Sleep-now or sleep-on-exit modes entered with SLEEPDEEP clear, which is controlled in System Control Register in ARM core. See note.[1]
	VLPW	VLPR	Interrupt
5	VLPW	RUN	Reset
6	VLPR	VLPS	PMCTRL[STOPM]=000[3] or 010, Sleep-now or sleep-on-exit modes entered with SLEEPDEEP set, which is controlled in System Control Register in ARM core. See note.[1]
	VLPS	VLPR	Interrupt **NOTE:** If VLPS was entered directly from RUN, hardware will not allow this transition and will force exit back to RUN
7	RUN	VLPS	PMPROT[AVLP]=1, PMCTRL[STOPM]=010, Sleep-now or sleep-on-exit modes entered with SLEEPDEEP set, which is controlled in System Control Register in ARM core. See note.[1]
	VLPS	RUN	Interrupt and VLPS mode was entered directly from RUN or Reset
8	RUN	VLLSx	PMPROT[AVLLS]=1, PMCTRL[STOPM]=100, STOPCTRL[VLLSM]=x (VLLSx), Sleep-now or sleep-on-exit modes entered with SLEEPDEEP set, which is controlled in System Control Register in ARM core.
	VLLSx	RUN	Wakeup from enabled LPTMR input source or RESET pin
9	VLPR	VLLSx	PMPROT[AVLLS]=1, PMCTRL[STOPM]=100, STOPCTRL[VLLSM]=x (VLLSx), Sleep-now or sleep-on-exit modes entered with SLEEPDEEP set, which is controlled in System Control Register in ARM core.

1. If debug is enabled, the core clock remains to support debug.
2. If PMCTRL[STOPM]=000 and STOPCTRL[PSTOPO]=01 or 10, then only a Partial Stop mode is entered instead of STOP

3. If PMCTRL[STOPM]=000 and STOPCTRL[PSTOPO]=00, then VLPS mode is entered instead of STOP. If PMCTRL[STOPM]=000 and STOPCTRL[PSTOPO]=01 or 10, then only a Partial Stop mode is entered instead of VLPS

13.4.2 Power mode entry/exit sequencing

When entering or exiting low-power modes, the system must conform to an orderly sequence to manage transitions safely. The SMC manages the system's entry into and exit from all power modes. The following diagram illustrates the connections of the SMC with other system components in the chip that are necessary to sequence the system through all power modes.

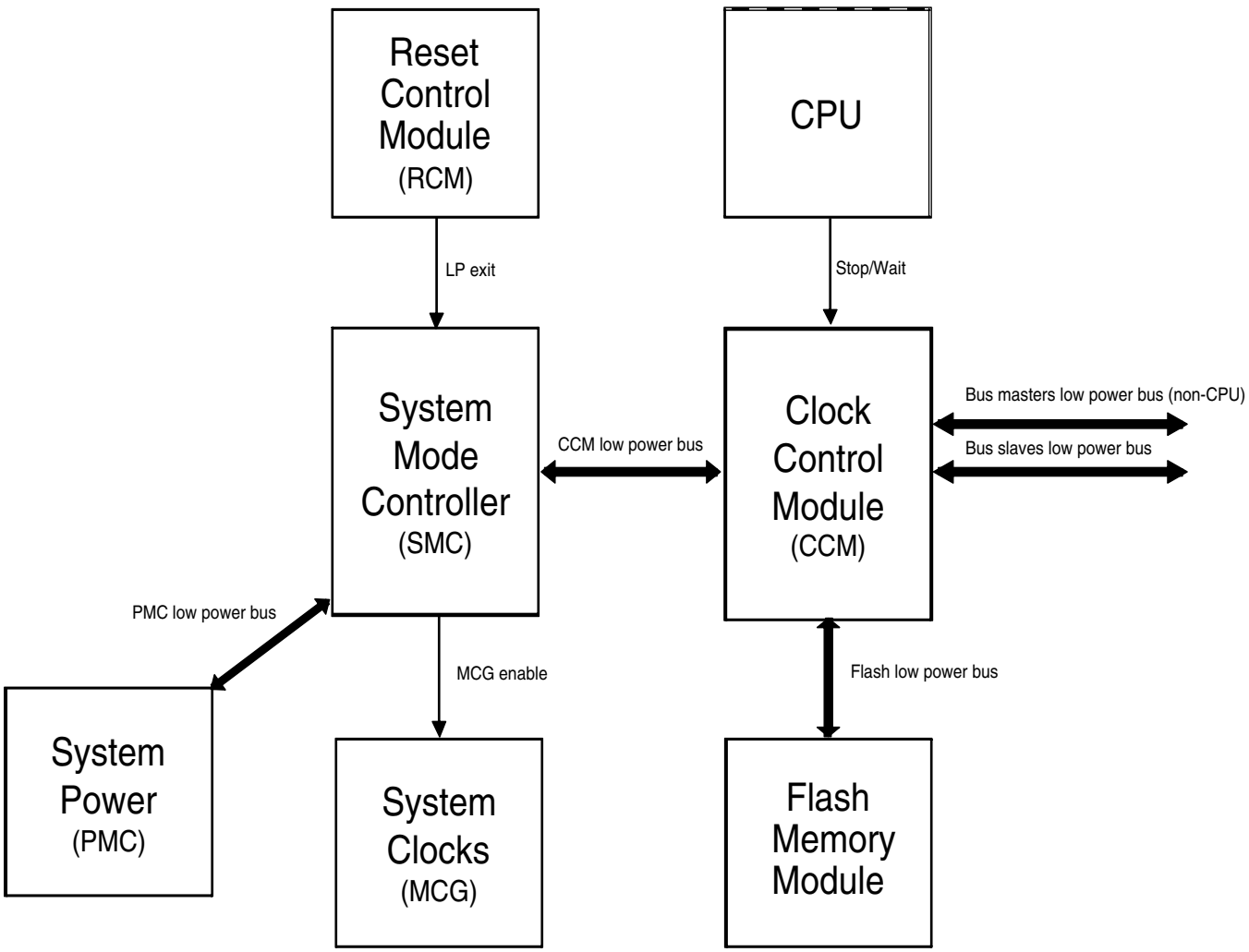

Figure 13-6. Low-power system components and connections

13.4.2.1 Stop mode entry sequence

Entry into a low-power stop mode (Stop, VLPS, VLLSx) is initiated by CPU execution of the WFI instruction. After the instruction is executed, the following sequence occurs:

1. The CPU clock is gated off immediately.
2. Requests are made to all non-CPU bus masters to enter Stop mode.
3. After all masters have acknowledged they are ready to enter Stop mode, requests are made to all bus slaves to enter Stop mode.
4. After all slaves have acknowledged they are ready to enter Stop mode, all system and bus clocks are gated off.
5. Clock generators are disabled in the MCG.
6. The on-chip regulator in the PMC and internal power switches are configured to meet the power consumption goals for the targeted low-power mode.

13.4.2.2 Stop mode exit sequence

Exit from a low-power stop mode is initiated either by a reset or an interrupt event. The following sequence then executes to restore the system to a run mode (RUN or VLPR):

1. The on-chip regulator in the PMC and internal power switches are restored.
2. Clock generators are enabled in the MCG.
3. System and bus clocks are enabled to all masters and slaves.
4. The CPU clock is enabled and the CPU begins servicing the reset or interrupt that initiated the exit from the low-power stop mode.

13.4.2.3 Aborted stop mode entry

If an interrupt or a reset occurs during a stop entry sequence, the SMC can abort the transition early and return to RUN mode without completely entering the stop mode. An aborted entry is possible only if the reset or interrupt occurs before the PMC begins the transition to stop mode regulation. After this point, the interrupt or reset is ignored until the PMC has completed its transition to stop mode regulation. When an aborted stop mode entry sequence occurs, the SMC's PMCTRL[STOPA] is set to 1.

13.4.2.4 Transition to wait modes

For wait modes (WAIT and VLPW), the CPU clock is gated off while all other clocking continues, as in RUN and VLPR mode operation. Some modules that support stop-in-wait functionality have their clocks disabled in these configurations.

13.4.2.5 Transition from stop modes to Debug mode

The debugger module supports a transition from STOP, WAIT, VLPS, and VLPW back to a Halted state when the debugger has been enabled. As part of this transition, system clocking is re-established and is equivalent to the normal RUN and VLPR mode clocking configuration.

13.4.3 Run modes

The device supports the following run modes:

- Run (RUN)
- Very Low-Power Run (VLPR)

13.4.3.1 RUN mode

This is the normal operating mode for the device.

This mode is selected after any reset. When the ARM processor exits reset, it sets up the stack, program counter (PC), and link register (LR):

- The processor reads the start SP (SP_main) from vector-table offset 0x000
- The processor reads the start PC from vector-table offset 0x004
- LR is set to 0xFFFF_FFFF.

To reduce power in this mode, disable the clocks to unused modules using their corresponding clock gating control bits in the SIM's registers.

13.4.3.2 Very-Low Power Run (VLPR) mode

In VLPR mode, the on-chip voltage regulator is put into a stop mode regulation state. In this state, the regulator is designed to supply enough current to the MCU over a reduced frequency. To further reduce power in this mode, disable the clocks to unused modules using their corresponding clock gating control bits in the SIM's registers.

Before entering this mode, the following conditions must be met:

- The MCG must be configured in a mode which is supported during VLPR. See the Power Management details for information about these MCG modes.
- All clock monitors in the MCG must be disabled.

- The maximum frequencies of the system, bus, flash, and core are restricted. See the Power Management details about which frequencies are supported.
- Mode protection must be set to allow VLP modes, that is, PMPROT[AVLP] is 1.
- PMCTRL[RUNM] is set to 10b to enter VLPR.
- Flash programming/erasing is not allowed.

NOTE

Do not change the clock frequency while in VLPR mode, because the regulator is slow responding and cannot manage fast load transitions. In addition, do not modify the clock source in the MCG module, the module clock enables in the SIM, or any clock divider registers.

To reenter Normal Run mode, clear RUNM. The PMSTAT register is a read-only status register that can be used to determine when the system has completed an exit to RUN mode. When PMSTAT=RUN, the system is in run regulation and the MCU can run at full speed in any clock mode. If a higher execution frequency is desired, poll the PMSTAT register until it is set to RUN when returning from VLPR mode.

Any reset always causes an exit from VLPR and returns the device to RUN mode after the MCU exits its reset flow.

13.4.4 Wait modes

This device contains two different wait modes:

- Wait
- Very-Low Power Wait (VLPW)

13.4.4.1 WAIT mode

WAIT mode is entered when the ARM core enters the Sleep-Now or Sleep-On-Exit modes while SLEEDEEP is cleared. The ARM CPU enters a low-power state in which it is not clocked, but peripherals continue to be clocked provided they are enabled. Clock gating to the peripheral is enabled via the SIM..

When an interrupt request occurs, the CPU exits WAIT mode and resumes processing in RUN mode, beginning with the stacking operations leading to the interrupt service routine.

A system reset will cause an exit from WAIT mode, returning the device to normal RUN mode.

13.4.4.2 Very-Low-Power Wait (VLPW) mode

VLPW is entered by the entering the Sleep-Now or Sleep-On-Exit mode while SLEEPDEEP is cleared and the MCU is in VLPR mode.

In VLPW, the on-chip voltage regulator remains in its stop regulation state. In this state, the regulator is designed to supply enough current to the MCU over a reduced frequency. To further reduce power in this mode, disable the clocks to unused modules by clearing the peripherals' corresponding clock gating control bits in the SIM.

VLPR mode restrictions also apply to VLPW.

When an interrupt from VLPW occurs, the device returns to VLPR mode to execute the interrupt service routine.

A system reset will cause an exit from VLPW mode, returning the device to normal RUN mode.

13.4.5 Stop modes

This device contains a variety of stop modes to meet your application needs. The stop modes range from:

- a stopped CPU, with all I/O, logic, and memory states retained, and certain asynchronous mode peripherals operating

to:

- a powered down CPU, with only I/O and a small register file retained, very few asynchronous mode peripherals operating, while the remainder of the MCU is powered down.

The choice of stop mode depends upon the user's application, and how power usage and state retention versus functional needs and recovery time may be traded off.

NOTE

All clock monitors must be disabled before entering these low-power modes: Stop, VLPS, VLPR, VLPW, and VLLSx.

The various stop modes are selected by setting the appropriate fields in PMPROT and PMCTRL. The selected stop mode is entered during the sleep-now or sleep-on-exit entry with the SLEEPDEEP bit set in the System Control Register in the ARM core.

The available stop modes are:

- Normal Stop (STOP)
- Very-Low Power Stop (VLPS)
- Very-Low-Leakage Stop (VLLSx)

13.4.5.1 STOP mode

STOP mode is entered via the sleep-now or sleep-on-exit with the SLEEPDEEP bit set in the System Control Register in the ARM core.

The MCG module can be configured to leave the reference clocks running.

A module capable of providing an asynchronous interrupt to the device takes the device out of STOP mode and returns the device to normal RUN mode. Refer to the device's Power Management chapter for peripheral, I/O, and memory operation in STOP mode. When an interrupt request occurs, the CPU exits STOP mode and resumes processing, beginning with the stacking operations leading to the interrupt service routine.

A system reset will cause an exit from STOP mode, returning the device to normal RUN mode via an MCU reset.

13.4.5.2 Very-Low-Power Stop (VLPS) mode

VLPS mode can be entered in one of two ways:

- Entry into stop via the sleep-now or sleep-on-exit with the SLEEPDEEP bit set in the System Control Register in the ARM core while the MCU is in VLPR mode and STOPM=010 or 000 in the PMCTRL register.
- Entry into stop via the sleep-now or sleep-on-exit with the SLEEPDEEP bit set in the System Control Register in the ARM core while the MCU is in normal RUN mode and STOPM=010 in the PMCTRL register. When VLPS is entered directly from RUN mode, exit to VLPR is disabled by hardware and the system will always exit back to RUN.

In VLPS, the on-chip voltage regulator remains in its stop regulation state as in VLPR.

A module capable of providing an asynchronous interrupt to the device takes the device out of VLPS and returns the device to VLPR mode.

A system reset will also cause a VLPS exit, returning the device to normal RUN mode.

13.4.5.3 Very-Low-Leakage Stop (VLLSx) modes

This device contains these very low leakage modes:

- VLLS3
- VLLS1
- VLLS0

VLLSx is often used in this document to refer to all of these modes.

All VLLSx modes can be entered from normal RUN or VLPR modes.

The MCU enters the configured VLLS mode if:

- In Sleep-Now or Sleep-On-Exit mode, the SLEEPDEEP bit is set in the System Control Register in the ARM core, and
- The device is configured as shown in Table 13-7.

In VLLS, the on-chip voltage regulator is in its stop-regulation state while most digital logic is powered off.

When entering VLLS, each I/O pin is latched as configured before executing VLLS. Because all digital logic in the MCU is powered off, all port and peripheral data is lost during VLLS. This information must be restored before the ACKISO bit in the PMC is set.

An asserted $\overline{\text{RESET}}$ pin will cause an exit from any VLLS mode, returning the device to normal RUN mode. When exiting VLLS via the $\overline{\text{RESET}}$ pin, the PIN and WAKEUP bits are set in the SRS0 register of the reset control module (RCM).

13.4.6 Debug in low power modes

When the MCU is secure, the device disables/limits debugger operation. When the MCU is unsecure, the ARM debugger can assert two power-up request signals:

- System power up, via SYSPWR in the Debug Port Control/Stat register
- Debug power up, via CDBGPWRUPREQ in the Debug Port Control/Stat register

When asserted while in RUN, WAIT, VLPR, or VLPW, the mode controller drives a corresponding acknowledge for each signal, that is, both CDBGPWRUPACK and CSYSPWRUPACK. When both requests are asserted, the mode controller handles attempts to enter STOP and VLPS by entering an emulated stop state. In this emulated stop state:

- the regulator is in run regulation,
- the MCG-generated clock source is enabled,

- all system clocks, except the core clock, are disabled,
- the debug module has access to core registers, and
- access to the on-chip peripherals is blocked.

No debug is available while the MCU is in VLLS modes.

Entering into a VLLS mode causes all of the debug controls and settings to be powered off. To give time to the debugger to sync with the MCU, the MDM AP Control Register includes a Very-Low-Leakage Debug Request (VLLDBGREQ) bit that is set to configure the Reset Controller logic to hold the system in reset after the next recovery from a VLLS mode. This bit allows the debugger time to reinitialize the debug module before the debug session continues.

The MDM AP Control Register also includes a Very Low Leakage Debug Acknowledge (VLLDBGACK) bit that is set to release the ARM core being held in reset following a VLLS recovery. The debugger reinitializes all debug IP, and then asserts the VLLDBGACK control bit to allow the RCM to release the ARM core from reset and allow CPU operation to begin.

The VLLDBGACK bit is cleared by the debugger (or can be left set as is) or clears automatically due to the reset generated as part of the next VLLS recovery.

Chapter 14
Power Management Controller (PMC)

14.1 Introduction

NOTE

For the chip-specific implementation details of this module's instances, see the chip configuration information.

The power management controller (PMC) contains the internal voltage regulator, power on reset (POR), and low voltage detect system.

14.2 Features

The PMC features include:

- Internal voltage regulator
- Active POR providing brown-out detect
- Low-voltage detect supporting two low-voltage trip points with four warning levels per trip point

14.3 Low-voltage detect (LVD) system

This device includes a system to guard against low-voltage conditions. This protects memory contents and controls MCU system states during supply voltage variations. The system is comprised of a power-on reset (POR) circuit and a LVD circuit with a user-selectable trip voltage: high (V_{LVDH}) or low (V_{LVDL}). The trip voltage is selected by LVDSC1[LVDV]. The LVD is disabled upon entering VLPx and VLLSx modes.

Two flags are available to indicate the status of the low-voltage detect system:

- The Low Voltage Detect Flag in the Low Voltage Status and Control 1 Register (LVDSC1[LVDF]) operates in a level sensitive manner. LVDSC1[LVDF] is set when the supply voltage falls below the selected trip point (VLVD). LVDSC1[LVDF] is cleared by writing 1 to LVDSC1[LVDACK], but only if the internal supply has returned above the trip point; otherwise, LVDSC1[LVDF] remains set.
- The Low Voltage Warning Flag (LVWF) in the Low Voltage Status and Control 2 Register (LVDSC2[LVWF]) operates in a level sensitive manner. LVDSC2[LVWF] is set when the supply voltage falls below the selected monitor trip point (VLVW). LVDSC2[LVWF] is cleared by writing one to LVDSC2[LVWACK], but only if the internal supply has returned above the trip point; otherwise, LVDSC2[LVWF] remains set.

14.3.1 LVD reset operation

By setting LVDSC1[LVDRE], the LVD generates a reset upon detection of a low-voltage condition. The low-voltage detection threshold is determined by LVDSC1[LVDV]. After an LVD reset occurs, the LVD system holds the MCU in reset until the supply voltage rises above this threshold. The LVD field in the SRS register of the RCM module (RCM_SRS0[LVD]) is set following an LVD or power-on reset.

14.3.2 LVD interrupt operation

By configuring the LVD circuit for interrupt operation (LVDIE set and LVDRE clear), LVDSC1[LVDF] is set and an LVD interrupt request occurs upon detection of a low voltage condition. The LVDF bit is cleared by writing one to the LVDSC1[LVDACK] bit.

14.3.3 Low-voltage warning (LVW) interrupt operation

The LVD system contains a Low-Voltage Warning Flag (LVWF) in the Low Voltage Detect Status and Control 2 Register to indicate that the supply voltage is approaching, but is above, the LVD voltage. The LVW also has an interrupt, which is enabled by setting LVDSC2[LVWIE]. If enabled, an LVW interrupt request occurs when LVDSC2[LVWF] is set. LVDSC2[LVWF] is cleared by writing 1 to LVDSC2[LVWACK].

LVDSC2[LVWV] selects one of the four trip voltages:

- Highest: V_{LVW4}
- Two mid-levels: V_{LVW3} and V_{LVW2}
- Lowest: V_{LVW1}

14.4 I/O retention

When in VLLS modes, the I/O states are held on a wakeup event (with the exception of wakeup by reset event) until the wakeup has been acknowledged via a write to the ACKISO bit. In the case of VLLS exit via a RESET pin, the I/O are released and default to their reset state. In this case, no write to the ACKISO is needed.

14.5 Memory map and register descriptions

PMC register details follow.

NOTE

Different portions of PMC registers are reset only by particular reset types. Each register's description provides details. For more information about the types of reset on this chip, refer to the Reset section details.

The PMC registers can be written only in supervisor mode. Write accesses in user mode are blocked and will result in a bus error.

PMC memory map

Absolute address (hex)	Register name	Width (in bits)	Access	Reset value	Section/ page
4007_D000	Low Voltage Detect Status And Control 1 register (PMC_LVDSC1)	8	R/W	10h	14.5.1/186
4007_D001	Low Voltage Detect Status And Control 2 register (PMC_LVDSC2)	8	R/W	00h	14.5.2/187
4007_D002	Regulator Status And Control register (PMC_REGSC)	8	R/W	04h	14.5.3/188

14.5.1 Low Voltage Detect Status And Control 1 register (PMC_LVDSC1)

This register contains status and control bits to support the low voltage detect function. This register should be written during the reset initialization program to set the desired controls even if the desired settings are the same as the reset settings.

While the device is in the very low power or low leakage modes, the LVD system is disabled regardless of LVDSC1 settings. To protect systems that must have LVD always on, configure the SMC's power mode protection register (PMPROT) to disallow any very low power or low leakage modes from being enabled.

See the device's data sheet for the exact LVD trip voltages.

NOTE

The LVDV bits are reset solely on a POR Only event. The register's other bits are reset on Chip Reset Not VLLS. For more information about these reset types, refer to the Reset section details.

Address: 4007_D000h base + 0h offset = 4007_D000h

Bit	7	6	5	4	3	2	1	0
Read	LVDF	0	LVDIE	LVDRE	0		LVDV	
Write		LVDACK						
Reset	0	0	0	1	0	0	0	0

PMC_LVDSC1 field descriptions

Field	Description
7 LVDF	Low-Voltage Detect Flag This read-only status bit indicates a low-voltage detect event. 0 Low-voltage event not detected 1 Low-voltage event detected
6 LVDACK	Low-Voltage Detect Acknowledge This write-only bit is used to acknowledge low voltage detection errors. Write 1 to clear LVDF. Reads always return 0.
5 LVDIE	Low-Voltage Detect Interrupt Enable Enables hardware interrupt requests for LVDF. 0 Hardware interrupt disabled (use polling) 1 Request a hardware interrupt when LVDF = 1

Table continues on the next page...

PMC_LVDSC1 field descriptions (continued)

Field	Description
4 LVDRE	Low-Voltage Detect Reset Enable This write-once bit enables LVDF events to generate a hardware reset. Additional writes are ignored. 0 LVDF does not generate hardware resets 1 Force an MCU reset when LVDF = 1
3–2 Reserved	This field is reserved. This read-only field is reserved and always has the value 0.
LVDV	Low-Voltage Detect Voltage Select Selects the LVD trip point voltage (V_{LVD}). 00 Low trip point selected ($V_{LVD} = V_{LVDL}$) 01 High trip point selected ($V_{LVD} = V_{LVDH}$) 10 Reserved 11 Reserved

14.5.2 Low Voltage Detect Status And Control 2 register (PMC_LVDSC2)

This register contains status and control bits to support the low voltage warning function.

While the device is in the very low power or low leakage modes, the LVD system is disabled regardless of LVDSC2 settings.

See the device's data sheet for the exact LVD trip voltages.

NOTE

The LVW trip voltages depend on LVWV and LVDV bits.

NOTE

The LVWV bits are reset solely on a POR Only event. The register's other bits are reset on Chip Reset Not VLLS. For more information about these reset types, refer to the Reset section details.

Address: 4007_D000h base + 1h offset = 4007_D001h

Bit	7	6	5	4	3	2	1	0
Read	LVWF	0	LVWIE	0			LVWV	
Write		LVWACK						
Reset	0	0	0	0	0	0	0	0

PMC_LVDSC2 field descriptions

Field	Description
7 LVWF	Low-Voltage Warning Flag This read-only status bit indicates a low-voltage warning event. LVWF is set when V_{Supply} transitions below the trip point, or after reset and V_{Supply} is already below V_{LVW}. LVWF bit may be 1 after power on reset, therefore, to use LVW interrupt function, before enabling LVWIE, LVWF must be cleared by writing LVWACK first. 0 Low-voltage warning event not detected 1 Low-voltage warning event detected
6 LVWACK	Low-Voltage Warning Acknowledge This write-only bit is used to acknowledge low voltage warning errors. Write 1 to clear LVWF. Reads always return 0.
5 LVWIE	Low-Voltage Warning Interrupt Enable Enables hardware interrupt requests for LVWF. 0 Hardware interrupt disabled (use polling) 1 Request a hardware interrupt when LVWF = 1
4–2 Reserved	This field is reserved. This read-only field is reserved and always has the value 0.
LVWV	Low-Voltage Warning Voltage Select Selects the LVW trip point voltage (V_{LVW}). The actual voltage for the warning depends on LVDSC1[LVDV]. 00 Low trip point selected ($V_{LVW} = V_{LVW1}$) 01 Mid 1 trip point selected ($V_{LVW} = V_{LVW2}$) 10 Mid 2 trip point selected ($V_{LVW} = V_{LVW3}$) 11 High trip point selected ($V_{LVW} = V_{LVW4}$)

14.5.3 Regulator Status And Control register (PMC_REGSC)

The PMC contains an internal voltage regulator. The voltage regulator design uses a bandgap reference that is also available through a buffer as input to certain internal peripherals, such as the CMP and ADC. The internal regulator provides a status bit (REGONS) indicating the regulator is in run regulation.

NOTE

This register is reset on Chip Reset Not VLLS and by reset types that trigger Chip Reset not VLLS. See the Reset section details for more information.

Address: 4007_D000h base + 2h offset = 4007_D002h

Bit	7	6	5	4	3	2	1	0
Read	0		Reserved	BGEN	ACKISO	REGONS	Reserved	BGBE
Write					w1c			
Reset	0	0	0	0	0	1	0	0

PMC_REGSC field descriptions

Field	Description
7–6 Reserved	This field is reserved. This read-only field is reserved and always has the value 0.
5 Reserved	This field is reserved.
4 BGEN	Bandgap Enable In VLPx Operation BGEN controls whether the bandgap is enabled in lower power modes of operation (VLPx, and VLLSx). When on-chip peripherals require the bandgap voltage reference in low power modes of operation, set BGEN to continue to enable the bandgap operation. **NOTE:** When the bandgap voltage reference is not needed in low power modes, clear BGEN to avoid excess power consumption. 0 Bandgap voltage reference is disabled in VLPx , and VLLSx modes 1 Bandgap voltage reference is enabled in VLPx , and VLLSx modes
3 ACKISO	Acknowledge Isolation Reading this bit indicates whether certain peripherals and the I/O pads are in a latched state as a result of having been in a VLLS mode. Writing one to this bit when it is set releases the I/O pads and certain peripherals to their normal run mode state. **NOTE:** After recovering from a VLLS mode, user should restore chip configuration before clearing ACKISO. 0 Peripherals and I/O pads are in normal run state 1 Certain peripherals and I/O pads are in an isolated and latched state
2 REGONS	Regulator In Run Regulation Status This read-only bit provides the current status of the internal voltage regulator. 0 Regulator is in stop regulation or in transition to/from it 1 Regulator is in run regulation
1 Reserved	This field is reserved. **NOTE:** This reserved bit must remain cleared (set to 0).
0 BGBE	Bandgap Buffer Enable Enables the bandgap buffer. 0 Bandgap buffer not enabled 1 Bandgap buffer enabled

Chapter 15
Reset Control Module (RCM)

15.1 Introduction

This chapter describes the registers of the Reset Control Module (RCM). The RCM implements many of the reset functions for the chip. See the chip's reset chapter for more information.

15.2 Reset memory map and register descriptions

The Reset Control Module (RCM) registers provide reset status information and reset filter control.

NOTE

The RCM registers can be written only in supervisor mode. Write accesses in user mode are blocked and will result in a bus error.

RCM memory map

Absolute address (hex)	Register name	Width (in bits)	Access	Reset value	Section/ page
4007_F000	System Reset Status Register 0 (RCM_SRS0)	8	R	82h	15.2.1/191
4007_F001	System Reset Status Register 1 (RCM_SRS1)	8	R	00h	15.2.2/193
4007_F004	Reset Pin Filter Control register (RCM_RPFC)	8	R/W	00h	15.2.3/194
4007_F005	Reset Pin Filter Width register (RCM_RPFW)	8	R/W	00h	15.2.4/195

15.2.1 System Reset Status Register 0 (RCM_SRS0)

This register includes read-only status flags to indicate the source of the most recent reset. The reset state of these bits depends on what caused the MCU to reset.

NOTE

The reset value of this register depends on the reset source:

- POR (including LVD) — 0x82
- LVD (without POR) — 0x02
- VLLS mode wakeup due to $\overline{\text{RESET}}$ pin assertion — 0x41
- VLLS mode wakeup due to other wakeup sources — 0x01
- Other reset — a bit is set if its corresponding reset source caused the reset

Address: 4007_F000h base + 0h offset = 4007_F000h

Bit	7	6	5	4	3	2	1	0
Read	POR	PIN	WDOG	0		LOC	LVD	WAKEUP
Write								
Reset	1	0	0	0	0	0	1	0

RCM_SRS0 field descriptions

Field	Description
7 POR	Power-On Reset Indicates a reset has been caused by the power-on detection logic. Because the internal supply voltage was ramping up at the time, the low-voltage reset (LVD) status bit is also set to indicate that the reset occurred while the internal supply was below the LVD threshold. 0 Reset not caused by POR 1 Reset caused by POR
6 PIN	External Reset Pin Indicates a reset has been caused by an active-low level on the external $\overline{\text{RESET}}$ pin. 0 Reset not caused by external reset pin 1 Reset caused by external reset pin
5 WDOG	Watchdog Indicates a reset has been caused by the watchdog timer Computer Operating Properly (COP) timing out. This reset source can be blocked by disabling the COP watchdog: write 00 to the SIM's COPC[COPT] field. 0 Reset not caused by watchdog timeout 1 Reset caused by watchdog timeout
4–3 Reserved	This field is reserved. This read-only field is reserved and always has the value 0.
2 LOC	Loss-of-Clock Reset Indicates a reset has been caused by a loss of external clock. The MCG clock monitor must be enabled for a loss of clock to be detected. Refer to the detailed MCG description for information on enabling the clock monitor. 0 Reset not caused by a loss of external clock. 1 Reset caused by a loss of external clock.

Table continues on the next page...

RCM_SRS0 field descriptions (continued)

Field	Description
1 LVD	Low-Voltage Detect Reset If the LVDRE bit is set and the supply drops below the LVD trip voltage, an LVD reset occurs. This bit is also set by POR. 0 Reset not caused by LVD trip or POR 1 Reset caused by LVD trip or POR
0 WAKEUP	Low Leakage Wakeup Reset Indicates a reset has been caused by an enabled wakeup source while the chip was in a low leakage mode. Any enabled wakeup source in a VLLSx mode causes a reset. This bit is cleared by any reset except WAKEUP. 0 Reset not caused by wakeup source 1 Reset caused by wakeup source

15.2.2 System Reset Status Register 1 (RCM_SRS1)

This register includes read-only status flags to indicate the source of the most recent reset. The reset state of these bits depends on what caused the MCU to reset.

NOTE

The reset value of this register depends on the reset source:

- POR (including LVD) — 0x00
- LVD (without POR) — 0x00
- VLLS mode wakeup — 0x00
- Other reset — a bit is set if its corresponding reset source caused the reset

Address: 4007_F000h base + 1h offset = 4007_F001h

Bit	7	6	5	4	3	2	1	0
Read	0	0	SACKERR	0	MDM_AP	SW	LOCKUP	0
Write								
Reset	0	0	0	0	0	0	0	0

RCM_SRS1 field descriptions

Field	Description
7 Reserved	This field is reserved. This read-only field is reserved and always has the value 0.
6 Reserved	This field is reserved. This read-only field is reserved and always has the value 0.
5 SACKERR	Stop Mode Acknowledge Error Reset

Table continues on the next page...

RCM_SRS1 field descriptions (continued)

Field	Description
	Indicates that after an attempt to enter Stop mode, a reset has been caused by a failure of one or more peripherals to acknowledge within approximately one second to enter stop mode. 0 Reset not caused by peripheral failure to acknowledge attempt to enter stop mode 1 Reset caused by peripheral failure to acknowledge attempt to enter stop mode
4 Reserved	This field is reserved. This read-only field is reserved and always has the value 0.
3 MDM_AP	MDM-AP System Reset Request Indicates a reset has been caused by the host debugger system setting of the System Reset Request bit in the MDM-AP Control Register. 0 Reset not caused by host debugger system setting of the System Reset Request bit 1 Reset caused by host debugger system setting of the System Reset Request bit
2 SW	Software Indicates a reset has been caused by software setting of SYSRESETREQ bit in Application Interrupt and Reset Control Register in the ARM core. 0 Reset not caused by software setting of SYSRESETREQ bit 1 Reset caused by software setting of SYSRESETREQ bit
1 LOCKUP	Core Lockup Indicates a reset has been caused by the ARM core indication of a LOCKUP event. 0 Reset not caused by core LOCKUP event 1 Reset caused by core LOCKUP event
0 Reserved	This field is reserved. This read-only field is reserved and always has the value 0.

15.2.3 Reset Pin Filter Control register (RCM_RPFC)

NOTE

The reset values of bits 2-0 are for Chip POR only. They are unaffected by other reset types.

NOTE

The bus clock filter is reset when disabled or when entering stop mode. The LPO filter is reset when disabled .

Address: 4007_F000h base + 4h offset = 4007_F004h

Bit	7	6	5	4	3	2	1	0
Read	0					RSTFLTSS	RSTFLTSRW	
Write								
Reset	0	0	0	0	0	0	0	0

RCM_RPFC field descriptions

Field	Description
7–3 Reserved	This field is reserved. This read-only field is reserved and always has the value 0.
2 RSTFLTSS	Reset Pin Filter Select in Stop Mode Selects how the reset pin filter is enabled in Stop and VLPS modes , and also during VLLS mode. On exit from VLLS mode, this bit should be reconfigured before clearing ACKISO in the PMC. 0 All filtering disabled 1 LPO clock filter enabled
RSTFLTSRW	Reset Pin Filter Select in Run and Wait Modes Selects how the reset pin filter is enabled in run and wait modes. 00 All filtering disabled 01 Bus clock filter enabled for normal operation 10 LPO clock filter enabled for normal operation 11 Reserved

15.2.4 Reset Pin Filter Width register (RCM_RPFW)

NOTE

The reset values of the bits in the RSTFLTSEL field are for Chip POR only. They are unaffected by other reset types.

Address: 4007_F000h base + 5h offset = 4007_F005h

Bit	7	6	5	4	3	2	1	0
Read	0			RSTFLTSEL				
Write								
Reset	0	0	0	0	0	0	0	0

RCM_RPFW field descriptions

Field	Description
7–5 Reserved	This field is reserved. This read-only field is reserved and always has the value 0.
RSTFLTSEL	Reset Pin Filter Bus Clock Select Selects the reset pin bus clock filter width. 00000 Bus clock filter count is 1 00001 Bus clock filter count is 2 00010 Bus clock filter count is 3 00011 Bus clock filter count is 4 00100 Bus clock filter count is 5

Table continues on the next page...

RCM_RPFW field descriptions (continued)

Field	Description
	00101 Bus clock filter count is 6 00110 Bus clock filter count is 7 00111 Bus clock filter count is 8 01000 Bus clock filter count is 9 01001 Bus clock filter count is 10 01010 Bus clock filter count is 11 01011 Bus clock filter count is 12 01100 Bus clock filter count is 13 01101 Bus clock filter count is 14 01110 Bus clock filter count is 15 01111 Bus clock filter count is 16 10000 Bus clock filter count is 17 10001 Bus clock filter count is 18 10010 Bus clock filter count is 19 10011 Bus clock filter count is 20 10100 Bus clock filter count is 21 10101 Bus clock filter count is 22 10110 Bus clock filter count is 23 10111 Bus clock filter count is 24 11000 Bus clock filter count is 25 11001 Bus clock filter count is 26 11010 Bus clock filter count is 27 11011 Bus clock filter count is 28 11100 Bus clock filter count is 29 11101 Bus clock filter count is 30 11110 Bus clock filter count is 31 11111 Bus clock filter count is 32

Chapter 16
Bit Manipulation Engine (BME)

16.1 Introduction

The Bit Manipulation Engine (BME) provides hardware support for atomic read-modify-write memory operations to the peripheral address space in Cortex-M0+ based microcontrollers. This architectural capability is also known as "decorated storage" as it defines a mechanism for providing additional semantics for load and store operations to memory-mapped peripherals beyond just the reading and writing of data values to the addressed memory locations. In the BME definition, the "decoration", that is, the additional semantic information, is encoded into the peripheral address used to reference the memory.

By combining the basic load and store instructions of the Cortex-M instruction set architecture (v6M, v7M) with the concept of decorated storage provided by the BME, the resulting implementation provides a robust and efficient read-modify-write capability to this class of ultra low-end microcontrollers. The resulting architectural capability defined by this core platform function is targeted at the manipulation of n-bit fields in peripheral registers and is consistent with I/O hardware addressing in the Embedded C standard. For most BME commands, a single core read or write bus cycle is converted into an atomic read-modify-write, that is, an indivisible "read followed by a write" bus sequence.

BME decorated references are only available on system bus transactions generated by the processor core and targeted at the standard 512 KB peripheral address space based at 0x4000_0000[1]. The decoration semantic is embedded into address bits[28:19], creating a 448 MB space at addresses 0x4400_0000 - 0x5FFF_FFFF for AIPS; these bits are stripped out of the actual address sent to the peripheral bus controller and used by the BME to define and control its operation.

1. To be perfectly accurate, the peripheral address space occupies a 516 KB region: 512 KB based at 0x4000_0000 plus a 4 KB space based at 0x400F_F000 for GPIO accesses. This organization provides compatibility with the Kinetis K Family. Attempted accesses to the memory space located between 0x4008_0000 - 0x400E_FFFF are error terminated due to an illegal address.

16.1.1 Overview

The following figure is a generic block diagram of the processor core and platform for this class of ultra low-end microcontrollers.

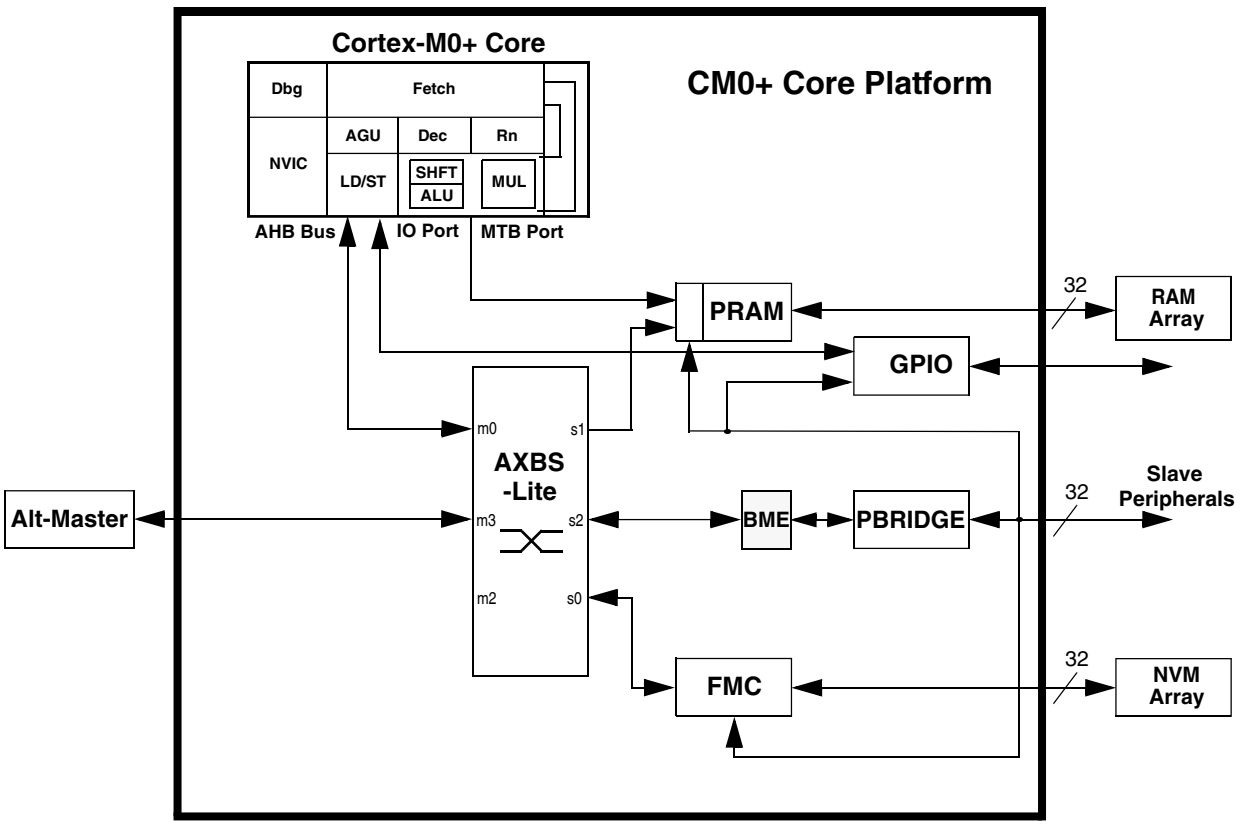

Note: BME can be accessed only by the core.

Figure 16-1. Cortex-M0+ core platform block diagram

As shown in the block diagram, the BME module interfaces to a crossbar switch AHB slave port as its primary input and sources an AHB bus output to the Peripheral Bridge (PBRIDGE) controller. The BME hardware microarchitecture is a 2-stage pipeline design matching the protocol of the AMBA-AHB system bus interfaces. The PBRIDGE module converts the AHB system bus protocol into the IPS/APB protocol used by the attached slave peripherals.

16.1.2 Features

The key features of the BME include:

- Lightweight implementation of decorated storage for peripheral address space
- Additional access semantics encoded into the reference address

- Resides between a crossbar switch slave port and a peripheral bridge bus controller
- Two-stage pipeline design matching the AHB system bus protocol
- Combinationally passes non-decorated accesses to peripheral bridge bus controller
- Conversion of decorated loads and stores from processor core into atomic read-modify-writes
- Decorated loads support unsigned bit field extracts, load-and-{set,clear} 1-bit operations
- Decorated stores support bit field inserts, logical AND, OR, and XOR operations
- Support for byte, halfword and word-sized decorated operations
- Supports minimum signal toggling on AHB output bus to reduce power dissipation

16.1.3 Modes of operation

The BME module does not support any special modes of operation. As a memory-mapped device located on a crossbar slave AHB system bus port, BME responds strictly on the basis of memory addresses for accesses to the connected peripheral bridge bus controller.

All functionality associated with the BME module resides in the core platform's clock domain; this includes its connections with the crossbar slave port and the PBRIDGE bus controller.

16.2 External signal description

The BME module does not directly support any external interfaces.

The internal interfaces include two standard AHB buses with 32-bit datapath widths: the primary input from the appropriate crossbar slave port (mx_h<signal>) and the primary output to the PBRIDGE bus controller (sx_h<signal>).

Note the signal directions are defined by the BME's view and are labeled based on the dominant direction. Accordingly, the mx_h<signal> AHB bus is the primary input, even though there are certain data phase signals (mx_h{rdata, ready, resp}) which are outputs from BME. Likewise, the sx_h<signal> AHB bus is the primary output even though there are specific data phase signals (sx_h{rdata, ready, resp}) which are inputs to BME.

16.3 Memory map and register definition

The BME module provides a memory-mapped capability and does not include any programming model registers. The exact set of functions supported by the BME are detailed in the Functional description.

The peripheral address space occupies a 516 KB region: 512 KB based at 0x4000_0000 plus a 4 KB space based at 0x400F_F000 for GPIO accesses; the decorated address space is mapped to the 448 MB region located at 0x4400_0000–0x5FFF_FFFF.

16.4 Functional description

This section details the specific functions supported by the BME.

Recall the combination of the basic load and store instructions of the Cortex-M instruction set architecture (v6M, v7M) plus the concept of decorated storage provided by the BME, the resulting implementation provides a robust and efficient read-modify-write capability to this class of ultra low-end microcontrollers. The resulting architectural capability defined by this core platform function is targeted at the manipulation of n-bit fields in peripheral registers and is consistent with I/O hardware addressing in the Embedded C standard. For most BME commands, a single core read or write bus cycle is converted into an atomic read-modify-write, that is, an indivisible "read followed by a write" bus sequence.

Consider decorated store operations first, then decorated loads.

16.4.1 BME decorated stores

The functions supported by the BME's decorated stores include three logical operators (AND, OR, XOR) plus a bit field insert. For all these operations, BME converts a single decorated AHB store transaction into a 2-cycle atomic read-modify-write sequence, where the combined read-modify operation is performed in the first AHB data phase, and then the write is performed in the second AHB data phase.

A generic timing diagram of a decorated store showing a bit field insert operation is shown as follows:

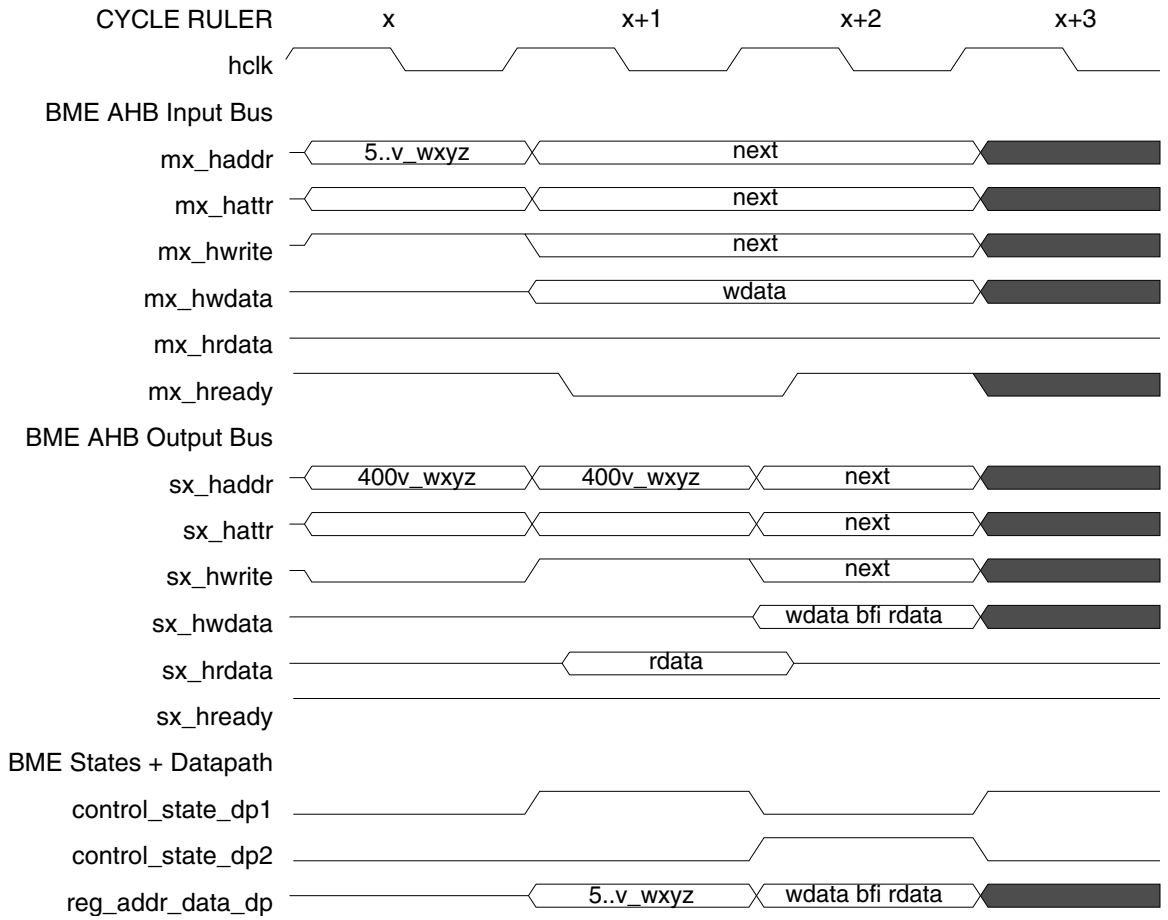

Figure 16-2. Decorated store: bit field insert timing diagram

All the decorated store operations follow the same execution template shown in Figure 16-2, a two-cycle read-modify-write operation:

1. Cycle x, 1st AHB address phase: Write from input bus (mx_h<signal>) is translated into a read operation on the output bus (sx_h<signal>) using the actual memory address (with the decoration removed) and then captured in a register (reg_addr_data_dp).
2. Cycle x+1, 2nd AHB address phase: Write access with the registered (but actual) memory address is output (sx_h<signal>)
3. Cycle x+1, 1st AHB data phase: Memory read data (sx_hrdata) is modified using the input bus write data (mx_hwdata) and the function defined by the decoration and captured in a data register. (reg_addr_data_dp); the input bus cycle is stalled (mx_hready = 0).
4. Cycle x+2, 2nd AHB data phase: Registered write data is sourced onto the output write data bus (sx_hwdata).

NOTE

Any wait states inserted by the peripheral slave device (sx_hready = 0) are simply passed through the BME back to the master input bus, stalling the AHB transaction cycle for cycle.

16.4.1.1 Decorated store logical AND (AND)

This command performs an atomic read-modify-write of the referenced memory location.

1. First, the location is read;
2. It is then modified by performing a logical AND operation using the write data operand sourced for the system bus cycle
3. Finally, the result of the AND operation is written back into the referenced memory location.

The data size is specified by the write operation and can be byte (8-bit), halfword (16-bit) or word (32-bit). The core performs the required write data lane replication on byte and halfword transfers.

	31	30	29	28	27	26	25	24	23	22	21	20	19	18	17	16	15	14	13	12	11	10	9	8	7	6	5	4	3	2	1	0
ioandb	0	1	0	0	0	1	-	-	-	-	-	-	mem_addr																			
ioandh	0	1	0	0	0	1	-	-	-	-	-	-	mem_addr																			0
ioandw	0	1	0	0	0	1	-	-	-	-	-	-	mem_addr																		0	0

Figure 16-3. Decorated store address: logical AND

See Figure 16-3 where addr[28:26] = 001 specifies the AND operation, and mem_addr[19:0] specifies the address offset into the peripheral space based at 0x4000_0000. The "-" indicates an address bit "don't care".

The decorated AND write operation is defined in the following pseudo-code as:

```
ioand<sz>(accessAddress, wdata)                  // decorated store AND
tmp   =  mem[accessAddress & 0xE00FFFFF, size]   // memory read
tmp   =  tmp & wdata                             // modify
mem[accessAddress & 0xE00FFFFF, size] = tmp      // memory write
```

where the operand size <sz> is defined as b(yte, 8-bit), h(alfword, 16-bit) and w(ord, 32-bit). This notation is used throughout the document.

In the cycle definition tables, the notations AHB_ap and AHB_dp refer to the address and data phases of the BME AHB transaction. The cycle-by-cycle BME operations are detailed in the following table.

Table 16-1. Cycle definitions of decorated store: logical AND

Pipeline Stage	Cycle		
	x	x+1	x+2
BME AHB_ap	Forward addr to memory; Decode decoration; Convert master_wt to slave_rd; Capture address, attributes	Recirculate captured addr + attr to memory as slave_wt	<next>
BME AHB_dp	<previous>	Perform memory read; Form (rdata & wdata) and capture destination data in register	Perform write sending registered data to memory

16.4.1.2 Decorated store logical OR (OR)

This command performs an atomic read-modify-write of the referenced memory location.

1. First, the location is read.
2. It is then modified by performing a logical OR operation using the write data operand sourced for the system bus cycle.
3. Finally, the result of the OR operation is written back into the referenced memory location.

The data size is specified by the write operation and can be byte (8-bit), halfword (16-bit) or word (32-bit). The core performs the required write data lane replication on byte and halfword transfers.

	31	30	29	28	27	26	25	24	23	22	21	20	19	18	17	16	15	14	13	12	11	10	9	8	7	6	5	4	3	2	1	0
ioorb	0	1	0	0	1	0	-	-	-	-	-	-	mem_addr																			
ioorh	0	1	0	0	1	0	-	-	-	-	-	-	mem_addr																			0
ioorw	0	1	0	0	1	0	-	-	-	-	-	-	mem_addr																		0	0

Figure 16-4. Decorated address store: logical OR

See Figure 16-4, where addr[28:26] = 010 specifies the OR operation, and mem_addr[19:0] specifies the address offset into the peripheral space based at 0x4000_0000. The "-" indicates an address bit "don't care".

The decorated OR write operation is defined in the following pseudo-code as:

```
ioor<sz>(accessAddress, wdata)                  // decorated store OR

tmp    =  mem[accessAddress & 0xE00FFFFF, size]  // memory read
tmp    =  tmp | wdata                            // modify
mem[accessAddress & 0xE00FFFFF, size] = tmp      // memory write
```

The cycle-by-cycle BME operations are detailed in the following table.

Table 16-2. Cycle definitions of decorated store: logical OR

Pipeline stage	Cycle		
	x	x+1	x+2
BME AHB_ap	Forward addr to memory; Decode decoration; Convert master_wt to slave_rd; Capture address, attributes	Recirculate captured addr + attr to memory as slave_wt	<next>
BME AHB_dp	<previous>	Perform memory read; Form (rdata | wdata) and capture destination data in register	Perform write sending registered data to memory

16.4.1.3 Decorated store logical XOR (XOR)

This command performs an atomic read-modify-write of the referenced memory location.

1. First, the location is read.
2. It is then modified by performing a logical XOR (exclusive-OR) operation using the write data operand sourced for the system bus cycle.
3. Finally, the result of the XOR operation is written back into the referenced memory location.

The data size is specified by the write operation and can be byte (8-bit), halfword (16-bit) or word (32-bit). The core performs the required write data lane replication on byte and halfword transfers.

	31	30	29	28	27	26	25	24	23	22	21	20	19	18	17	16	15	14	13	12	11	10	9	8	7	6	5	4	3	2	1	0
ioxorb	0	1	0	0	1	1	-	-	-	-	-	-	mem_addr																			
ioxorh	0	1	0	0	1	1	-	-	-	-	-	-	mem_addr																			0
ioxorw	0	1	0	0	1	1	-	-	-	-	-	-	mem_addr																		0	0

Figure 16-5. Decorated address store: logical XOR

See Figure 16-5, where addr[28:26] = 011 specifies the XOR operation, and mem_addr[19:0] specifies the address offset into the peripheral space based at 0x4000_0000. The "-" indicates an address bit "don't care".

The decorated XOR write operation is defined in the following pseudo-code as:

```
ioxor<sz>(accessAddress, wdata)                  // decorated store XOR

tmp    =  mem[accessAddress & 0xE00FFFFF, size]  // memory read
tmp    =  tmp ^ wdata                            // modify
mem[accessAddress & 0xE00FFFFF, size] = tmp      // memory write
```

The cycle-by-cycle BME operations are detailed in the following table.

Table 16-3. Cycle definitions of decorated store: logical XOR

Pipeline Stage	Cycle		
	x	x+1	x+2
BME AHB_ap	Forward addr to memory; Decode decoration; Convert master_wt to slave_rd; Capture address, attributes	Recirculate captured addr + attr to memory as slave_wt	<next>
BME AHB_dp	<previous>	Perform memory read; Form (rdata ^ wdata) and capture destination data in register	Perform write sending registered data to memory

16.4.1.4 Decorated store bit field insert (BFI)

This command inserts a bit field contained in the write data operand, defined by LSB position (b) and the bit field width (w+1), into the memory "container" defined by the access size associated with the store instruction using an atomic read-modify-write sequence.

The data size is specified by the write operation and can be byte (8-bit), halfword (16-bit) or word (32-bit).

NOTE

For the word sized operation, the maximum bit field width is 16 bits. The core performs the required write data lane replication on byte and halfword transfers.

The BFI operation can be used to insert a single bit into a peripheral. For this case, the w field is simply set to 0, indicating a bit field width of 1.

	31	30	29	28	27	26	25	24	23	22	21	20	19	18	17	16	15	14	13	12	11	10	9	8	7	6	5	4	3	2	1	0
iobfib	0	1	0	1	-	-	b	b	b	-	w	w	w	mem_addr																		
iobfih	0	1	0	1	-	b	b	b	b	w	w	w	w	mem_addr																		0
iobfiw	0	1	0	1	b	b	b	b	b	w	w	w	w	mem_addr																	0	0

Figure 16-6. Decorated address store: bit field insert

where addr[28] = 1 signals a BFI operation, addr[27:23] is "b", the LSB identifier, addr[22:19] is "w", the bit field width minus 1 identifier, and addr[18:0] specifies the address offset into the peripheral space based at 0x4000_0000. The "-" indicates an address bit "don't care". Note, unlike the other decorated store operations, BFI uses addr[19] as the least significant bit in the "w" specifier and not as an address bit.

The decorated BFI write operation is defined in the following pseudo-code as:

```
iobfi<sz>(accessAddress, wdata)                  // decorated bit field insert

tmp    =  mem[accessAddress & 0xE007FFFF, size]  // memory read
mask   = ((1 << (w+1)) - 1) << b                 // generate bit mask
tmp    =  tmp    & ~mask                         // modify
       |  wdata &  mask
mem[accessAddress & 0xE007FFFF, size] = tmp      // memory write
```

The write data operand (wdata) associated with the store instruction contains the bit field to be inserted. It must be properly aligned within a right-aligned container, that is, within the lower 8 bits for a byte operation, the lower 16 bits for a halfword, or the entire 32 bits for a word operation.

To illustrate, consider the following example of the insertion of the 3-bit field "xyz" into an 8-bit memory container, initially set to "abcd_efgh". For all cases, w is 2, signaling a bit field width of 3.

```
if b = 0 and the decorated store (strb) Rt register[7:0] = ----_-xyz,
   then destination is "abcd_exyz"
if b = 1 and the decorated store (strb) Rt register[7:0] = ----_xyz-,
   then destination is "abcd_xyzh"
if b = 2 and the decorated store (strb) Rt register[7:0] = ---x_yz--,
   then destination is "abcx_yzgh"
if b = 3 and the decorated store (strb) Rt register[7:0] = --xy_z---,
   then destination is "abxy_zfgh"
if b = 4 and the decorated store (strb) Rt register[7:0] = -xyz_----,
   then destination is "axyz_efgh"
if b = 5 and the decorated store (strb) Rt register[7:0] = xyz-_----,
   then destination is "xyzd_efgh"
if b = 6 and the decorated store (strb) Rt register[7:0] = yz--_----,
   then destination is "yzcd_efgh"
if b = 7 and the decorated store (strb) Rt register[7:0] = z---_----,
   then destination is "zbcd_efgh"
```

Note from the example, when the starting bit position plus the field width exceeds the container size, only part of the source bit field is inserted into the destination memory location. Stated differently, if (b + w+1) > container_width, only the low-order "container_width - b" bits are actually inserted.

The cycle-by-cycle BME operations are detailed in the following table.

Table 16-4. Cycle definitions of decorated store: bit field insert

Pipeline stage	Cycle		
	x	x+1	x+2
BME AHB_ap	Forward addr to memory; Decode decoration; Convert master_wt to slave_rd; Capture address, attributes	Recirculate captured addr + attr to memory as slave_wt	<next>
BME AHB_dp	<previous>	Perform memory read; Form bit mask; Form bitwise ((mask) ? wdata : rdata)) and capture destination data in register	Perform write sending registered data to memory

16.4.2 BME decorated loads

The functions supported by the BME's decorated loads include two single-bit load-and-{set, clear} operators plus unsigned bit field extracts. For the two load-and-{set, clear} operations, BME converts a single decorated AHB load transaction into a two-cycle atomic read-modify-write sequence, where the combined read-modify operations are performed in the first AHB data phase, and then the write is performed in the second AHB data phase as the original read data is returned to the processor core. For an unsigned bit field extract, the decorated load transaction is stalled for one cycle in the BME as the data field is extracted, then aligned and returned to the processor in the second AHB data phase. This is the only decorated transaction that is not an atomic read-modify-write, as it is a simple data read.

A generic timing diagram of a decorated load showing a load-and-set 1-bit operation is shown as follows.

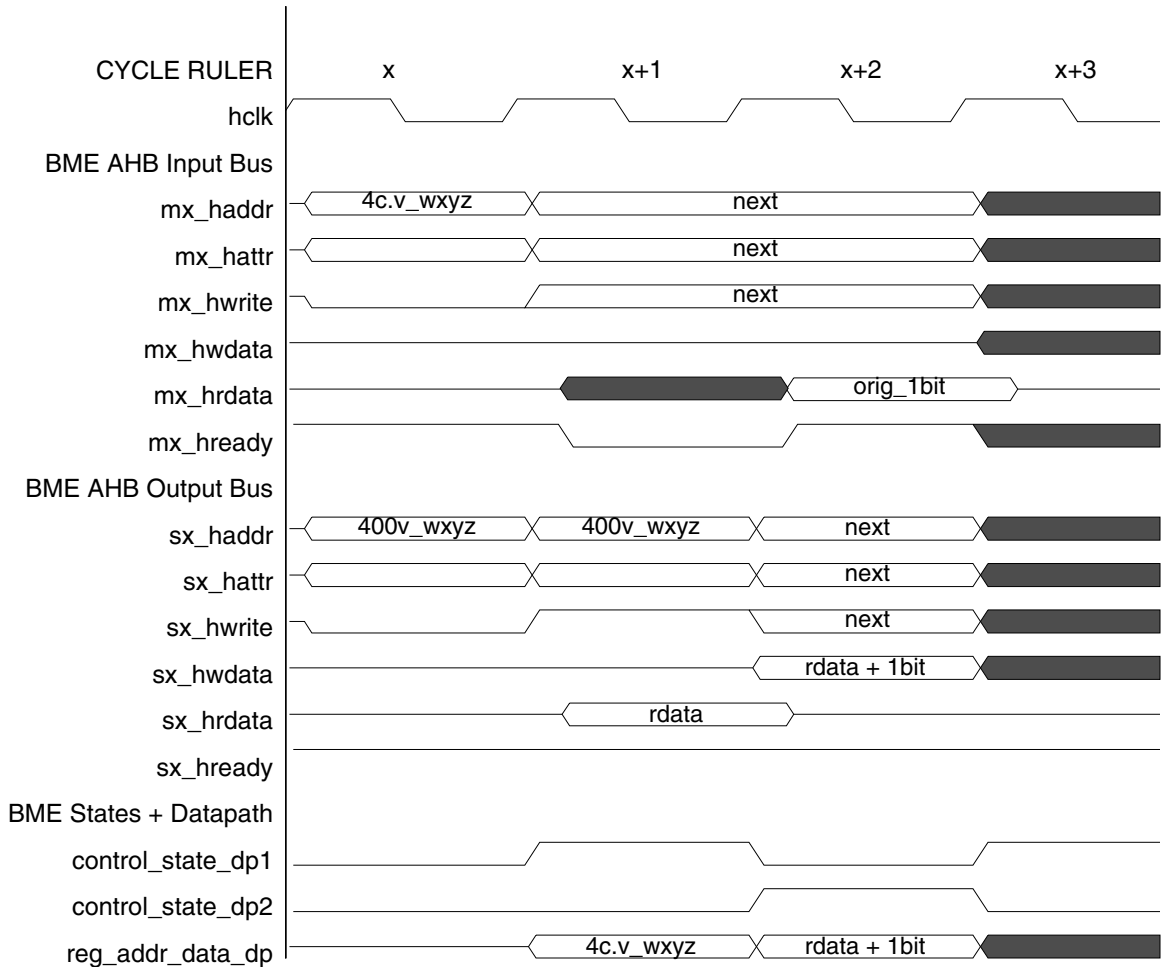

Figure 16-7. Decorated load: load-and-set 1-bit field insert timing diagram

Decorated load-and-{set, clear} 1-bit operations follow the execution template shown in the above figure: a 2-cycle read-modify-write operation:

1. Cycle x, first AHB address phase: Read from input bus is translated into a read operation on the output bus with the actual memory address (with the decoration removed) and then captured in a register
2. Cycle x+1, second AHB address phase: Write access with the registered (but actual) memory address is output
3. Cycle x+1, first AHB data phase: The "original" 1-bit memory read data is captured in a register, while the 1-bit field is set or clear based on the function defined by the decoration with the modified data captured in a register; the input bus cycle is stalled
4. Cycle x+2, second AHB data phase: The selected original 1-bit is right-justified, zero-filled and then driven onto the input read data bus, while the registered write data is sourced onto the output write data bus

NOTE

Any wait states inserted by the peripheral slave device (sx_hready = 0) are simply passed through the BME back to the master input bus, stalling the AHB transaction cycle for cycle.

A generic timing diagram of a decorated load showing an unsigned bit field operation is shown in the following figure.

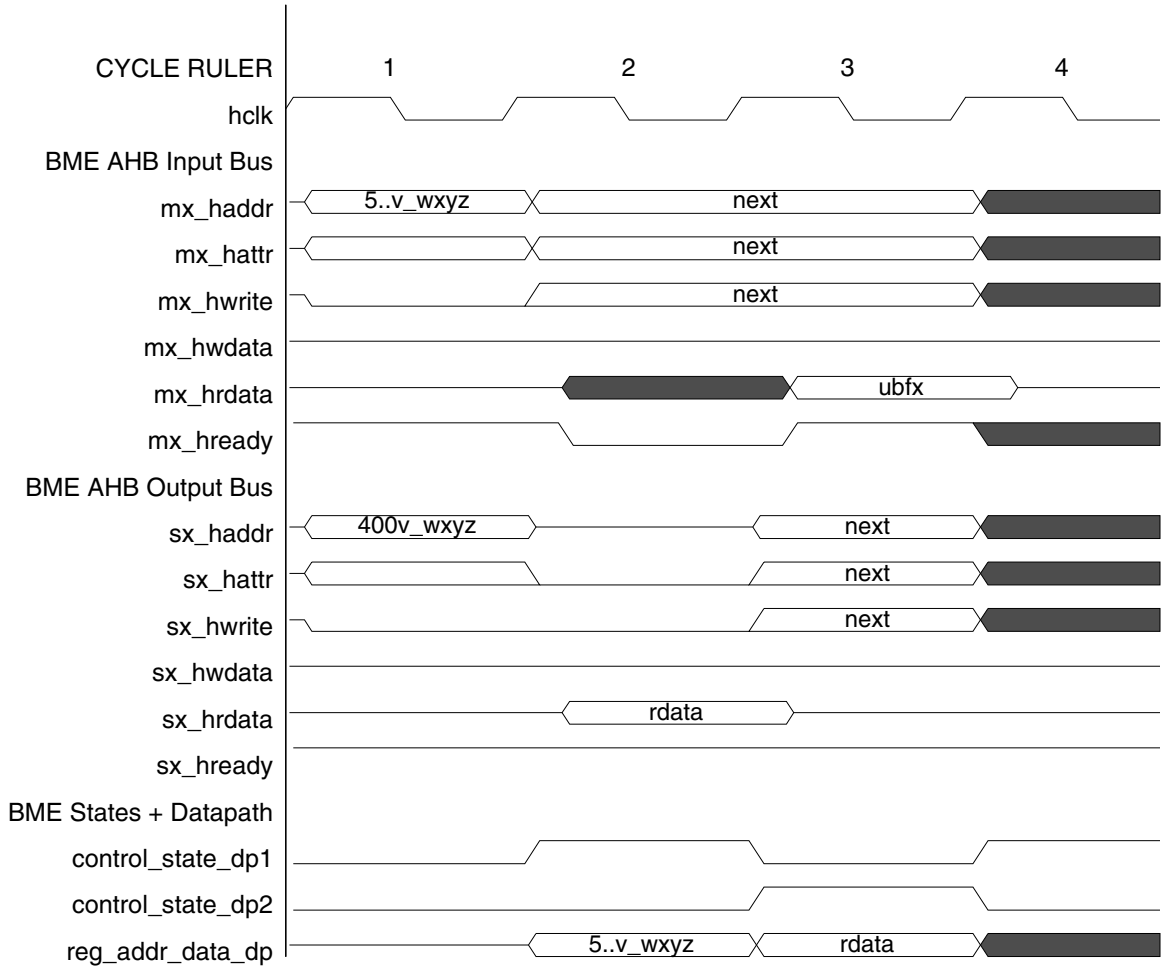

Figure 16-8. Decorated load: unsigned bit field insert timing diagram

The decorated unsigned bit field extract follows the same execution template shown in the above figure, a 2-cycle read operation:

- Cycle x, 1st AHB address phase: Read from input bus is translated into a read operation on the output bus with the actual memory address (with the decoration removed) and then captured in a register
- Cycle x+1, 2nd AHB address phase: Idle cycle
- Cycle x+1, 1st AHB data phase: A bit mask is generated based on the starting bit position and the field width; the mask is AND'ed with the memory read data to isolate the bit field; the resulting data is captured in a data register; the input bus cycle is stalled
- Cycle x+2, 2nd AHB data phase: Registered data is logically right-aligned for proper alignment and driven onto the input read data bus

NOTE

Any wait states inserted by the peripheral slave device (sx_hready = 0) are simply passed through the BME back to the master input bus, stalling the AHB transaction cycle for cycle.

16.4.2.1 Decorated load: load-and-clear 1 bit (LAC1)

This command loads a 1-bit field defined by the LSB position (b) into the core's general purpose destination register (Rt) and zeroes the bit in the memory space after performing an atomic read-modify-write sequence.

The extracted 1-bit data field from the memory address is right-justified and zero-filled in the operand returned to the core.

The data size is specified by the read operation and can be byte (8-bit), halfword (16-bit) or word (32-bit).

	31	30	29	28	27	26	25	24	23	22	21	20	19	18	17	16	15	14	13	12	11	10	9	8	7	6	5	4	3	2	1	0
iolac1b	0	1	0	0	1	0	-	-	b	b	b	-	mem_addr																			
iolac1h	0	1	0	0	1	0	-	b	b	b	b	-	mem_addr																			0
iolac1w	0	1	0	0	1	0	b	b	b	b	b	-	mem_addr																		0	0

Figure 16-9. Decorated load address: load-and-clear 1 bit

See Figure 16-9 where addr[28:26] = 010 specifies the load-and-clear 1 bit operation, addr[25:21] is "b", the bit identifier, and mem_addr[19:0] specifies the address offset into the peripheral space based at 0x4000_0000. The "-" indicates an address bit "don't care".

The decorated load-and-clear 1-bit read operation is defined in the following pseudo-code as:

```
rdata =  iolac1<sz>(accessAddress)              // decorated load-and-clear 1

tmp   =  mem[accessAddress & 0xE00FFFFF, size]  // memory read
mask  =  1 << b                                 // generate bit mask
rdata = (tmp &  mask) >> b                      // read data returned to core
tmp   =  tmp & ~mask                            // modify
mem[accessAddress & 0xE00FFFFF, size] = tmp     // memory write
```

The cycle-by-cycle BME operations are detailed in the following table.

Table 16-5. Cycle definitions of decorated load: load-and-clear 1 bit

Pipeline Stage	Cycle		
	x	x+1	x+2
BME AHB_ap	Forward addr to memory; Decode decoration; Capture address, attributes	Recirculate captured addr + attr to memory as slave_wt	<next>
BME AHB_dp	<previous>	Perform memory read; Form bit mask; Extract bit from rdata; Form (rdata & ~mask) and capture destination data in register	Return extracted bit to master; Perform write sending registered data to memory

16.4.2.2 Decorated Load: Load-and-Set 1 Bit (LAS1)

This command loads a 1-bit field defined by the LSB position (b) into the core's general purpose destination register (Rt) and sets the bit in the memory space after performing an atomic read-modify-write sequence.

The extracted one bit data field from the memory address is right justified and zero filled in the operand returned to the core.

The data size is specified by the read operation and can be byte (8-bit), halfword (16-bit) or word (32-bit).

	31	30	29	28	27	26	25	24	23	22	21	20	19 18 17 16	15 14 13 12	11 10 9 8	7 6 5 4	3 2	1	0
iolas1b	0	1	0	0	1	1	-	-	b	b	b	-	mem_addr						
iolas1h	0	1	0	0	1	1	-	b	b	b	b	-	mem_addr						0
iolas1w	0	1	0	0	1	1	b	b	b	b	b	-	mem_addr					0	0

Figure 16-10. Decorated load address: load-and-set 1 bit

where addr[28:26] = 011 specifies the load-and-set 1 bit operation, addr[25:21] is "b", the bit identifier, and mem_addr[19:0] specifies the address offset into the peripheral space based at 0x4000_0000. The "-" indicates an address bit "don't care".

The decorated Load-and-Set 1 Bit read operation is defined in the following pseudo-code as:

```
rdata =  iolas1<sz>(accessAddress)              // decorated load-and-set 1

tmp   =  mem[accessAddress & 0xE00FFFFF, size]  // memory read
mask  =  1 << b                                 // generate bit mask
rdata = (tmp &  mask) >> b                      // read data returned to core
tmp   =  tmp |  mask                            // modify
mem[accessAddress & 0xE00FFFFF, size] = tmp     // memory write
```

The cycle-by-cycle BME operations are detailed in the following table.

Table 16-6. Cycle definitions of decorated load: load-and-set 1-bit

Pipeline Stage	Cycle		
	x	x+1	x+2
BME AHB_ap	Forward addr to memory; Decode decoration; Capture address, attributes	Recirculate captured addr + attr to memory as slave_wt	<next>
BME AHB_dp	<previous>	Perform memory read; Form bit mask; Extract bit from rdata; Form (rdata | mask) and capture destination data in register	Return extracted bit to master; Perform write sending registered data to memory

16.4.2.3 Decorated load unsigned bit field extract (UBFX)

This command extracts a bit field defined by LSB position (b) and the bit field width (w +1) from the memory "container" defined by the access size associated with the load instruction using a two-cycle read sequence.

The extracted bit field from the memory address is right-justified and zero-filled in the operand returned to the core. Recall this is the only decorated operation that does not perform a memory write, that is, UBFX only performs a read.

The data size is specified by the write operation and can be byte (8-bit), halfword (16-bit) or word (32-bit). Note for the word sized operation, the maximum bit field width is 16 bits.

The use of a UBFX operation is recommended to extract a single bit from a peripheral. For this case, the w field is simply set to 0, indicating a bit field width of 1.

	31	30	29	28	27	26	25	24	23	22	21	20	19	18	17	16	15	14	13	12	11	10	9	8	7	6	5	4	3	2	1	0
ioubfxb	0	1	0	1	-	-	b	b	b	-	w	w	w	mem_addr																		
ioubfxh	0	1	0	1	-	b	b	b	b	w	w	w	w	mem_addr																		0
ioubfxw	0	1	0	1	b	b	b	b	b	w	w	w	w	mem_addr																	0	0

Figure 16-11. Decorated load address: unsigned bit field extract

See Figure 16-11, where addr[28] = 1 specifies the unsigned bit field extract operation, addr[27:23] is "b", the LSB identifier, addr[22:19] is "w", the bit field width minus 1 identifier, and mem_addr[18:0] specifies the address offset into the peripheral space based at 0x4000_0000. The "-" indicates an address bit "don't care". Note, unlike the other decorated load operations, UBFX uses addr[19] as the least significant bit in the "w" specifier and not as an address bit.

The decorated unsigned bit field extract read operation is defined in the following pseudo-code as:

```
rdata =  ioubfx<sz>(accessAddress)              // unsigned bit field extract

tmp   =  mem[accessAddress & 0xE007FFFF, size]  // memory read
mask  = ((1 << (w+1)) - 1) << b                 // generate bit mask
rdata = (tmp &  mask) >> b                      // read data returned to core
```

Like the BFI operation, when the starting bit position plus the field width exceeds the container size, only part of the source bit field is extracted from the destination memory location. Stated differently, if (b + w+1) > container_width, only the low-order "container_width - b" bits are actually extracted. The cycle-by-cycle BME operations are detailed in the following table.

Table 16-7. Cycle definitions of decorated load: unsigned bit field extract

Pipeline Stage	Cycle		
	x	x+1	x+2
BME AHB_ap	Forward addr to memory; Decode decoration; Capture address, attributes	Idle AHB address phase	<next>
BME AHB_dp	<previous>	Perform memory read; Form bit mask; Form (rdata & mask) and capture destination data in register	Logically right shift registered data; Return justified rdata to master

16.4.3 Additional details on decorated addresses and GPIO accesses

As previously noted, the peripheral address space occupies a 516 KB region: 512 KB based at 0x4000_0000 plus a 4 KB space based at 0x400F_F000 for GPIO accesses. This memory layout provides compatibility with the Kinetis K Family and provides 129 address "slots", each 4 KB in size.

The GPIO address space is multiply-mapped by the hardware: it appears at the "standard" system address 0x400F_F000 and is physically located in the address slot corresponding to address 0x4000_F000. Decorated loads and stores create a slight complication involving accesses to the GPIO. Recall the use of address[19] varies by decorated operation; for AND, OR, XOR, LAC1 and LAS1, this bit functions as a true address bit, while for BFI and UBFX, this bit defines the least significant bit of the "w" bit field specifier.

As a result, undecorated GPIO references and decorated AND, OR, XOR, LAC1 and LAS1 operations can use the standard 0x400F_F000 base address, while decorated BFI and UBFX operations must use the alternate 0x4000_F000 base address. Another implementation can simply use 0x400F_F000 as the base address for all undecorated GPIO accesses and 0x4000_F000 as the base address for all decorated accesses. Both implementations are supported by the hardware.

Table 16-8. Decorated peripheral and GPIO address details

Peripheral address space	Description
0x4000_0000–0x4007_FFFF	Undecorated (normal) peripheral accesses
0x4008_0000–0x400F_EFFF	Illegal addresses; attempted references are aborted and error terminated
0x400F_F000–0x400F_FFFF	Undecorated (normal) GPIO accesses using standard address
0x4010_0000–0x43FF_FFFF	Illegal addresses; attempted references are aborted and error terminated

Table continues on the next page...

Table 16-8. Decorated peripheral and GPIO address details (continued)

Peripheral address space	Description
0x4400_0000–0x4FFF_FFFF	Decorated AND, OR, XOR, LAC1, LAS1 references to peripherals and GPIO based at either 0x4000_F000 or 0x400F_F000
0x5000_0000–0x5FFF_FFFF	Decorated BFI, UBFX references to peripherals and GPIO only based at 0x4000_F000

16.5 Application information

In this section, GNU assembler macros with C expression operands are presented as examples of the required instructions to perform decorated operations. This section specifically presents a partial bme.h file defining the assembly language expressions for decorated logical stores: AND, OR, and XOR. Comparable functions for BFI and the decorated loads are more complex and available in the complete BME header file.

These macros use the same function names presented in Functional description.

```
#define IOANDW(ADDR,WDATA)          \
    __asm("ldr    r3, =(1<<26);"    \
          "orr    r3, %[addr];"     \
          "mov    r2, %[wdata];"    \
          "str    r2, [r3];"        \
          :: [addr] "r" (ADDR), [wdata] "r" (WDATA) : "r2", "r3");

#define IOANDH(ADDR,WDATA)          \
    __asm("ldr    r3, =(1<<26);"    \
          "orr    r3, %[addr];"     \
          "mov    r2, %[wdata];"    \
          "strh   r2, [r3];"        \
          :: [addr] "r" (ADDR), [wdata] "r" (WDATA) : "r2", "r3");

#define IOANDB(ADDR,WDATA)          \
    __asm("ldr    r3, =(1<<26);"    \
          "orr    r3, %[addr];"     \
          "mov    r2, %[wdata];"    \
          "strb   r2, [r3];"        \
          :: [addr] "r" (ADDR), [wdata] "r" (WDATA) : "r2", "r3");

#define IOORW(ADDR,WDATA)           \
    __asm("ldr    r3, =(1<<27);"    \
          "orr    r3, %[addr];"     \
          "mov    r2, %[wdata];"    \
          "str    r2, [r3];"        \
          :: [addr] "r" (ADDR), [wdata] "r" (WDATA) : "r2", "r3");

#define IOORH(ADDR,WDATA)           \
    __asm("ldr    r3, =(1<<27);"    \
          "orr    r3, %[addr];"     \
          "mov    r2, %[wdata];"    \
          "strh   r2, [r3];"        \
          :: [addr] "r" (ADDR), [wdata] "r" (WDATA) : "r2", "r3");

#define IOORB(ADDR,WDATA)           \
    __asm("ldr    r3, =(1<<27);"    \
          "orr    r3, %[addr];"     \
          "mov    r2, %[wdata];"    \
          "strb   r2, [r3];"        \
```

```
          :: [addr] "r" (ADDR), [wdata] "r" (WDATA) : "r2", "r3");

#define IOXORW(ADDR,WDATA)           \
    __asm("ldr    r3, =(3<<26);"     \
          "orr    r3, %[addr];"      \
          "mov    r2, %[wdata];"     \
          "str    r2, [r3];"         \
          :: [addr] "r" (ADDR), [wdata] "r" (WDATA) : "r2", "r3");

#define IOXORH(ADDR,WDATA)           \
    __asm("ldr    r3, =(3<<26);"     \
          "orr    r3, %[addr];"      \
          "mov    r2, %[wdata];"     \
          "strh   r2, [r3];"         \
          :: [addr] "r" (ADDR), [wdata] "r" (WDATA) : "r2", "r3");

#define IOXORB(ADDR,WDATA)           \
    __asm("ldr    r3, =(3<<26);"     \
          "orr    r3, %[addr];"      \
          "mov    r2, %[wdata];"     \
          "strb   r2, [r3];"         \
          :: [addr] "r" (ADDR), [wdata] "r" (WDATA) : "r2", "r3");
```

Chapter 17
Miscellaneous Control Module (MCM)

17.1 Introduction

NOTE

For the chip-specific implementation details of this module's instances, see the chip configuration information.

The Miscellaneous Control Module (MCM) provides a myriad of miscellaneous control functions.

17.1.1 Features

The MCM includes the following features:

- Program-visible information on the platform configuration
- Crossbar master arbitration policy selection
- Flash controller speculation buffer and cache configurations

17.2 Memory map/register descriptions

The memory map and register descriptions below describe the registers using byte addresses. The registers can be written only when in supervisor mode.

MCM memory map

Absolute address (hex)	Register name	Width (in bits)	Access	Reset value	Section/ page
F000_3008	Crossbar Switch (AXBS) Slave Configuration (MCM_PLASC)	16	R	0007h	17.2.1/218

Table continues on the next page...

MCM memory map (continued)

Absolute address (hex)	Register name	Width (in bits)	Access	Reset value	Section/ page
F000_300A	Crossbar Switch (AXBS) Master Configuration (MCM_PLAMC)	16	R	0001h	17.2.2/219
F000_300C	Platform Control Register (MCM_PLACR)	32	R/W	0000_0000h	17.2.3/219
F000_3040	Compute Operation Control Register (MCM_CPO)	32	R/W	0000_0000h	17.2.4/222

17.2.1 Crossbar Switch (AXBS) Slave Configuration (MCM_PLASC)

PLASC is a 16-bit read-only register identifying the presence/absence of bus slave connections to the device's crossbar switch.

Address: F000_3000h base + 8h offset = F000_3008h

Bit	15	14	13	12	11	10	9	8	7	6	5	4	3	2	1	0
Read	0								ASC							
Write																
Reset	0	0	0	0	0	0	0	0	0	0	0	0	0	1	1	1

MCM_PLASC field descriptions

Field	Description
15–8 Reserved	This field is reserved. This read-only field is reserved and always has the value 0.
ASC	Each bit in the ASC field indicates whether there is a corresponding connection to the crossbar switch's slave input port. 0 A bus slave connection to AXBS input port *n* is absent. 1 A bus slave connection to AXBS input port *n* is present.

17.2.2 Crossbar Switch (AXBS) Master Configuration (MCM_PLAMC)

PLAMC is a 16-bit read-only register identifying the presence/absence of bus master connections to the device's crossbar switch.

Address: F000_3000h base + Ah offset = F000_300Ah

Bit	15	14	13	12	11	10	9	8	7	6	5	4	3	2	1	0
Read	0								AMC							
Write																
Reset	0	0	0	0	0	0	0	0	0	0	0	0	0	0	0	1

MCM_PLAMC field descriptions

Field	Description
15–8 Reserved	This field is reserved. This read-only field is reserved and always has the value 0.
AMC	Each bit in the AMC field indicates whether there is a corresponding connection to the AXBS master input port. 0 A bus master connection to AXBS input port *n* is absent 1 A bus master connection to AXBS input port *n* is present

17.2.3 Platform Control Register (MCM_PLACR)

The PLACR register selects the arbitration policy for the crossbar masters and configures the flash memory controller.

The speculation buffer and cache in the flash memory controller is configurable via PLACR[15:10].

The speculation buffer is enabled only for instructions after reset. It is possible to have these states for the speculation buffer:

DFCS	EFDS	Description
0	0	Speculation buffer is on for instruction and off for data.
0	1	Speculation buffer is on for instruction and on for data.
1	X	Speculation buffer is off.

The cache in flash controller is enabled and caching both instruction and data type fetches after reset. It is possible to have these states for the cache:

DFCC	DFCIC	DFCDA	Description
0	0	0	Cache is on for both instruction and data.
0	0	1	Cache is on for instruction and off for data.
0	1	0	Cache is off for instruction and on for data.
0	1	1	Cache is off for both instruction and data.
1	X	X	Cache is off.

Address: F000_3000h base + Ch offset = F000_300Ch

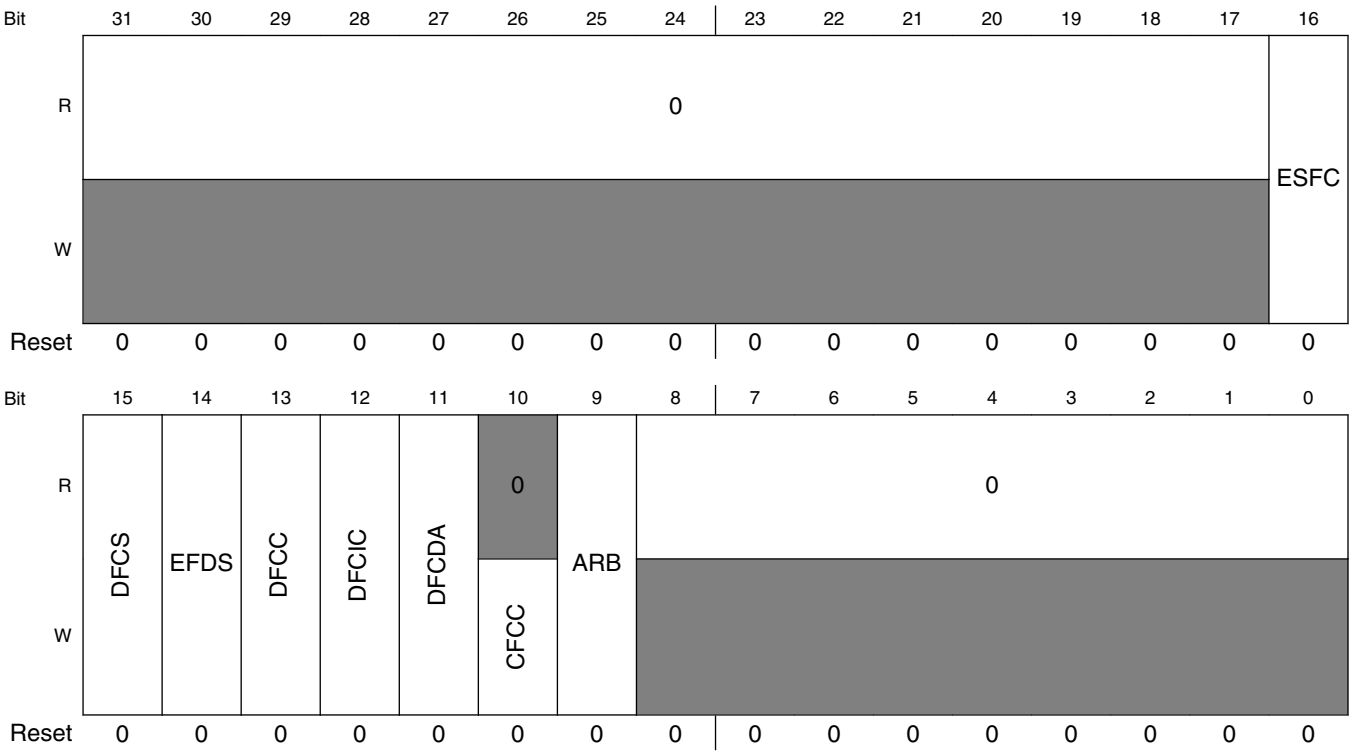

MCM_PLACR field descriptions

Field	Description
31–17 Reserved	This field is reserved. This read-only field is reserved and always has the value 0.
16 ESFC	Enable Stalling Flash Controller Enables stalling flash controller when flash is busy. 0 Disable stalling flash controller when flash is busy. 1 Enable stalling flash controller when flash is busy.

Table continues on the next page...

MCM_PLACR field descriptions (continued)

Field	Description
15 DFCS	Disable Flash Controller Speculation Disables flash controller speculation. 0 Enable flash controller speculation. 1 Disable flash controller speculation.
14 EFDS	Enable Flash Data Speculation Enables flash data speculation. 0 Disable flash data speculation. 1 Enable flash data speculation.
13 DFCC	Disable Flash Controller Cache Disables flash controller cache. 0 Enable flash controller cache. 1 Disable flash controller cache.
12 DFCIC	Disable Flash Controller Instruction Caching Disables flash controller instruction caching. 0 Enable flash controller instruction caching. 1 Disable flash controller instruction caching.
11 DFCDA	Disable Flash Controller Data Caching Disables flash controller data caching. 0 Enable flash controller data caching 1 Disable flash controller data caching.
10 CFCC	Clear Flash Controller Cache Writing a 1 to this field clears the cache. Writing a 0 to this field is ignored. This field always reads as 0.
9 ARB	Arbitration select 0 Fixed-priority arbitration for the crossbar masters 1 Round-robin arbitration for the crossbar masters
Reserved	This field is reserved. This read-only field is reserved and always has the value 0.

17.2.4 Compute Operation Control Register (MCM_CPO)

This register controls the Compute Operation.

Address: F000_3000h base + 40h offset = F000_3040h

Bit	31	30	29	28	27	26	25	24	23	22	21	20	19	18	17	16
R	0															
W																
Reset	0	0	0	0	0	0	0	0	0	0	0	0	0	0	0	0

Bit	15	14	13	12	11	10	9	8	7	6	5	4	3	2	1	0
R	0													CPOWOI	CPOACK	CPOREQ
W																
Reset	0	0	0	0	0	0	0	0	0	0	0	0	0	0	0	0

MCM_CPO field descriptions

Field	Description
31–3 Reserved	This field is reserved. This read-only field is reserved and always has the value 0.
2 CPOWOI	Compute Operation wakeup on interrupt 0 No effect. 1 When set, the CPOREQ is cleared on any interrupt or exception vector fetch.
1 CPOACK	Compute Operation acknowledge 0 Compute operation entry has not completed or compute operation exit has completed. 1 Compute operation entry has completed or compute operation exit has not completed.
0 CPOREQ	Compute Operation request This bit is auto-cleared by vector fetching if CPOWOI = 1.

Table continues on the next page...

MCM_CPO field descriptions (continued)

Field	Description
	0 Request is cleared. 1 Request Compute Operation.

Chapter 18
Micro Trace Buffer (MTB)

18.1 Introduction

Microcontrollers using the Cortex-M0+ processor core include support for a CoreSight Micro Trace Buffer to provide program trace capabilities. The proper name for this function is the CoreSight Micro Trace Buffer for the Cortex-M0+ Processor; in this document, it is simply abbreviated as the MTB.

The simple program trace function creates instruction address change-of-flow data packets in a user-defined region of the system RAM. Accordingly, the system RAM controller manages requests from two sources:

- AMBA-AHB reads and writes from the system bus
- program trace packet writes from the processor

As part of the MTB functionality, there is a DWT (Data Watchpoint and Trace) module that allows the user to define watchpoint addresses, or optionally, an address and data value, that when triggered, can be used to start or stop the program trace recording.

This document details the functionality of both the MTB_RAM and MTB_DWT capabilities.

18.1.1 Overview

A generic block diagram of the processor core and platform for this class of ultra low-end microcontrollers is shown as follows:

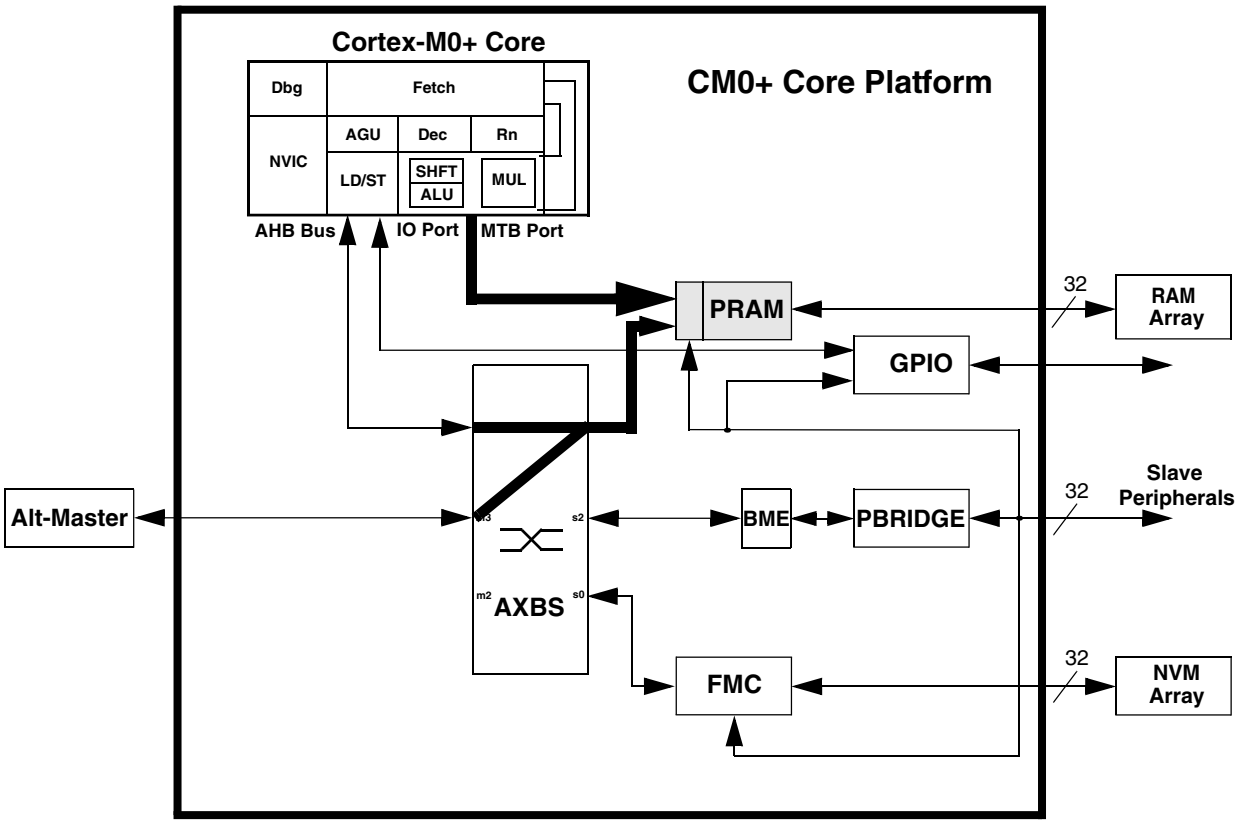

Figure 18-1. Generic Cortex-M0+ core platform block diagram

As shown in the block diagram, the platform RAM (PRAM) controller connects to two input buses:

- the crossbar slave port for system bus accesses
- a "private execution MTB port" from the core

The logical paths from the crossbar master input ports to the PRAM controller are highlighted along with the private execution trace port from the processor core. The private MTB port signals the instruction address information needed for the 64-bit program trace packets written into the system RAM. The PRAM controller output interfaces to the attached RAM array. In this document, the PRAM controller is the MTB_RAM controller.

The following information is taken from the ARM CoreSight Micro Trace Buffer documentation.

"The execution trace packet consists of a pair of 32-bit words that the MTB generates when it detects the processor PC value changes non-sequentially. A non-sequential PC change can occur during branch instructions or during exception entry.

The processor can cause a trace packet to be generated for any instruction.

The following figure shows how the execution trace information is stored in memory as a sequence of packets.

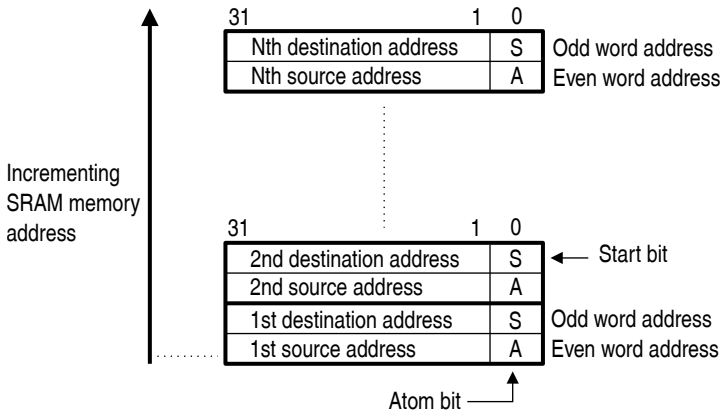

Figure 18-2. MTB execution trace storage format

The first, lower addressed, word contains the source of the branch, the address it branched from. The value stored only records bits[31:1] of the source address, because Thumb instructions are at least halfword aligned. The least significant bit of the value is the A-bit. The A-bit indicates the atomic state of the processor at the time of the branch, and can differentiate whether the branch originated from an instruction in a program, an exception, or a PC update in Debug state. When it is zero the branch originated from an instruction, when it is one the branch originated from an exception or PC update in Debug state. This word is always stored at an even word location.

The second, higher addressed word contains the destination of the branch, the address it branched to. The value stored only records bits[31:1] of the branch address. The least significant bit of the value is the S-bit. The S-bit indicates where the trace started. An S-bit value of 1 indicates where the first packet after the trace started and a value of 0 is used for other packets. Because it is possible to start and stop tracing multiple times in a trace session, the memory might contain several packets with the S-bit set to 1. This word is always stored in the next higher word in memory, an odd word address.

When the A-bit is set to 1, the source address field contains the architecturally-preferred return address for the exception. For example, if an exception was caused by an SVC instruction, then the source address field contains the address of the following instruction. This is different from the case where the A-bit is set to 0. In this case, the source address contains the address of the branch instruction.

For an exception return operation, two packets are generated:

- The first packet has the:
  - Source address field set to the address of the instruction that causes the exception return, BX or POP.

  - Destination address field set to bits[31:1] of the EXC_RETURN value. See the ARM v6-M Architecture Reference Manual.
  - The A-bit set to 0.

- The second packet has the:
  - Source address field set to bits[31:1] of the EXC_RETURN value.
  - Destination address field set to the address of the instruction where execution commences.
  - A-bit set to 1."

Given the recorded change-of-flow trace packets in system RAM and the memory image of the application, a debugger can read out the data and create an instruction-by-instruction program trace. In keeping with the low area and power implementation cost design targets, the MTB trace format is less efficient than other CoreSight trace modules, for example, the ETM (Embedded Trace Macrocell). Since each branch packet is 8 bytes in size, a 1 KB block of system RAM can contain 128 branches. Using the Dhrystone 2.1 benchmark's dynamic runtime as an example, this corresponds to about 875 instructions per KB of trace RAM, or with a zero wait state memory, this corresponds to approximately 1600 processor cycles per KB. This metric is obviously very sensitive to the runtime characteristics of the user code.

The MTB_DWT function (not shown in the core platform block diagram) monitors the processor address and data buses so that configurable watchpoints can be detected to trigger the appropriate response in the MTB recording.

18.1.2 Features

The key features of the MTB_RAM and MTB_DWT include:

- Memory controller for system RAM and Micro Trace Buffer for program trace packets
- Read/write capabilities for system RAM accesses, write-only for program trace packets
- Supports zero wait state response to system bus accesses when no trace data is being written
- Can buffer two AHB address phases and one data write for system RAM accesses
- Supports 64-bit program trace packets including source and destination instruction addresses
- Program trace information in RAM available to MCU's application code or external debugger
- Program trace watchpoint configuration accessible by MCU's application code or debugger
- Location and size of RAM trace buffer is configured by software

- Two DWT comparators (addresses or address + data) provide programmable start/stop recording
- CoreSight compliant debug functionality

18.1.3 Modes of operation

The MTB_RAM and MTB_DWT functions do not support any special modes of operation. The MTB_RAM controller, as a memory-mapped device located on the platform's slave AHB system bus, responds based strictly on memory addresses for accesses to its attached RAM array. The MTB private execution bus provides program trace packet write information to the RAM controller. Both the MTB_RAM and MTB_DWT modules are memory-mapped so their programming models can be accessed.

All functionality associated with the MTB_RAM and MTB_DWT modules resides in the core platform's clock domain; this includes its connections with the RAM array.

18.2 External signal description

The MTB_RAM and MTB_DWT modules do not directly support any external interfaces.

The internal interfaces includes a standard AHB bus with a 32-bit datapath width from the appropriate crossbar slave port plus the private execution trace bus from the processor core. The signals in the private execution trace bus are detailed in the following table taken from the ARM CoreSight Micro Trace Buffer documentation. The signal direction is defined as viewed by the MTB_RAM controller.

Table 18-1. Private execution trace port from the core to MTB_RAM

Signal	Direction	Description
LOCKUP	Input	Indicates the processor is in the Lockup state. This signal is driven LOW for cycles when the processor is executing normally and driven HIGH for every cycle the processor is waiting in the Lockup state. This signal is valid on every cycle.
IAESEQ	Input	Indicates the next instruction address in execute, IAEX, is sequential, that is non-branching.
IAEXEN	Input	IAEX register enable.
IAEX[30:0]	Input	Registered address of the instruction in the execution stage, shifted right by one bit, that is, PC >> 1.
ATOMIC	Input	Indicates the processor is performing non-instruction related activities.
EDBGRQ	Output	Request for the processor to enter the Debug state, if enabled, and halt.

In addition, there are two signals formed by the MTB_DWT module and driven to the MTB_RAM controller: TSTART (trace start) and TSTOP (trace stop). These signals can be configured using the trace watchpoints to define programmable addresses and data values to affect the program trace recording state.

18.3 Memory map and register definition

The MTB_RAM and MTB_DWT modules each support a sparsely-populated 4 KB address space for their programming models. For each address space, there are a variety of control and configurable registers near the base address, followed by a large unused address space and finally a set of CoreSight registers to support dynamic determination of the debug configuration for the device.

Accesses to the programming model follow standard ARM conventions. Taken from the ARM CoreSight Micro Trace Buffer documentation, these are:

- Do not attempt to access reserved or unused address locations. Attempting to access these locations can result in UNPREDICTABLE behavior.
- The behavior of the MTB is UNPREDICTABLE if the registers with UNKNOWN reset values are not programmed prior to enabling trace.
- Unless otherwise stated in the accompanying text:
  - Do not modify reserved register bits
  - Ignore reserved register bits on reads
  - All register bits are reset to a logic 0 by a system or power-on reset
  - Use only word size, 32-bit, transactions to access all registers

18.3.1 MTB_RAM Memory Map

MTB memory map

Absolute address (hex)	Register name	Width (in bits)	Access	Reset value	Section/ page
F000_0000	MTB Position Register (MTB_POSITION)	32	R/W	Undefined	18.3.1.1/ 232
F000_0004	MTB Master Register (MTB_MASTER)	32	R/W	See section	18.3.1.2/ 233
F000_0008	MTB Flow Register (MTB_FLOW)	32	R/W	Undefined	18.3.1.3/ 235
F000_000C	MTB Base Register (MTB_BASE)	32	R	Undefined	18.3.1.4/ 237
F000_0F00	Integration Mode Control Register (MTB_MODECTRL)	32	R	0000_0000h	18.3.1.5/ 237

Table continues on the next page...

MTB memory map (continued)

Absolute address (hex)	Register name	Width (in bits)	Access	Reset value	Section/ page
F000_0FA0	Claim TAG Set Register (MTB_TAGSET)	32	R	0000_0000h	18.3.1.6/ 238
F000_0FA4	Claim TAG Clear Register (MTB_TAGCLEAR)	32	R	0000_0000h	18.3.1.7/ 238
F000_0FB0	Lock Access Register (MTB_LOCKACCESS)	32	R	0000_0000h	18.3.1.8/ 239
F000_0FB4	Lock Status Register (MTB_LOCKSTAT)	32	R	0000_0000h	18.3.1.9/ 239
F000_0FB8	Authentication Status Register (MTB_AUTHSTAT)	32	R	0000_0000h	18.3.1.10/ 239
F000_0FBC	Device Architecture Register (MTB_DEVICEARCH)	32	R	4770_0A31h	18.3.1.11/ 240
F000_0FC8	Device Configuration Register (MTB_DEVICECFG)	32	R	0000_0000h	18.3.1.12/ 241
F000_0FCC	Device Type Identifier Register (MTB_DEVICETYPID)	32	R	0000_0031h	18.3.1.13/ 241
F000_0FD0	Peripheral ID Register (MTB_PERIPHID4)	32	R	See section	18.3.1.14/ 242
F000_0FD4	Peripheral ID Register (MTB_PERIPHID5)	32	R	See section	18.3.1.14/ 242
F000_0FD8	Peripheral ID Register (MTB_PERIPHID6)	32	R	See section	18.3.1.14/ 242
F000_0FDC	Peripheral ID Register (MTB_PERIPHID7)	32	R	See section	18.3.1.14/ 242
F000_0FE0	Peripheral ID Register (MTB_PERIPHID0)	32	R	See section	18.3.1.14/ 242
F000_0FE4	Peripheral ID Register (MTB_PERIPHID1)	32	R	See section	18.3.1.14/ 242
F000_0FE8	Peripheral ID Register (MTB_PERIPHID2)	32	R	See section	18.3.1.14/ 242
F000_0FEC	Peripheral ID Register (MTB_PERIPHID3)	32	R	See section	18.3.1.14/ 242
F000_0FF0	Component ID Register (MTB_COMPID0)	32	R	See section	18.3.1.15/ 242
F000_0FF4	Component ID Register (MTB_COMPID1)	32	R	See section	18.3.1.15/ 242
F000_0FF8	Component ID Register (MTB_COMPID2)	32	R	See section	18.3.1.15/ 242
F000_0FFC	Component ID Register (MTB_COMPID3)	32	R	See section	18.3.1.15/ 242

18.3.1.1 MTB Position Register (MTB_POSITION)

The MTB_POSITION register contains the Trace Write Address Pointer and Wrap fields. This register can be modified by the explicit programming model writes. It is also automatically updated by the MTB hardware when trace packets are being recorded.

The base address of the system RAM in the memory map dictates special consideration for the placement of the MTB. Consider the following guidelines:

For the standard configuration where the size of the MTB is ≤ 25% of the total RAM capacity, it is recommended the MTB be based at the address defined by the MTB_BASE register. The read-only MTB_BASE register is defined by the expression (0x2000_0000 - (RAM_Size/4)). For this configuration, the MTB_POSITION register is initialized to MTB_BASE & 0x0000_7FF8.

If the size of the MTB is more than 25% but less than or equal to 50% of the total RAM capacity, it is recommended the MTB be based at address 0x2000_0000. In this configuration, the MTB_POSITION register is initialized to (0x2000_0000 & 0x0000_7FF8) = 0x0000_00000.

Following these two suggested placements provides a full-featured circular memory buffer containing program trace packets.

In the unlikely event an even larger trace buffer is required, a write-once capacity of 75% of the total RAM capacity can be based at address 0x2000_0000. The MTB_POSITION register is initialized to (0x2000_0000 & 0x0000_7FF8) = 0x0000_0000. However, this configuration cannot support operation as a circular queue and instead requires the use of the MTB_FLOW[WATERMARK] capability to automatically disable tracing or halting the processor as the number of packet writes approach the buffer capacity. See the MTB_FLOW register description for more details.

Address: F000_0000h base + 0h offset = F000_0000h

Bit	31	30	29	28	27	26	25	24	23	22	21	20	19	18	17	16
R/W	POINTER															
Reset	x*	x*	x*	x*	x*	x*	x*	x*	x*	x*	x*	x*	x*	x*	x*	x*

Bit	15	14	13	12	11	10	9	8	7	6	5	4	3	2	1	0
R	POINTER													WRAP	0	
W																
Reset	x*	x*	x*	x*	x*	x*	x*	x*	x*	x*	x*	x*	x*	x*	0	0

* Notes:
- x = Undefined at reset.

MTB_POSITION field descriptions

Field	Description

31–3
POINTER
	Trace Packet Address Pointer[28:0]
	
	Because a packet consists of two words, the POINTER field is the address of the first word of a packet. This field contains bits[31:3] of the RAM address where the next trace packet is written. Therefore, it points to an unused location and is automatically incremented.
	
	A debug agent can calculate the system memory map address for the current location in the MTB using the following "generic" equation:
	
	Given mtb_size = 1 << (MTB_MASTER[MASK] + 4),
	
	systemAddress = MTB_BASE + (((MTB_POSITION & 0xFFFF_FFF8) + (mtb_size - (MTB_BASE & (mtb_size-1)))) & 0x0000_7FF8);
	
	For this device, a simpler expression also applies. See the following pseudo-code:
	
	if ((MTB_POSITION >> 13) == 0x3) systemAddress = (0x1FFF << 16) + (0x1 << 15) + (MTB_POSITION & 0x7FF8); else systemAddress = (0x2000 << 16) + (0x0 << 15) + (MTB_POSITION & 0x7FF8);
	
	NOTE: The size of the RAM is parameterized and the most significant bits of the POINTER field are RAZ/WI.
	
	For these devices, POSITION[31:15] == POSITION[POINTER[28:12]] are RAZ/WI. Therefore, the active bits in this field are POSITION[14:3] == POSITION[POINTER[11:0]].

2 WRAP	This field is set to 1 automatically when the POINTER value wraps as determined by the MTB_MASTER[MASK] field in the MASTER Trace Control Register. A debug agent might use the WRAP field to determine whether the trace information above and below the pointer address is valid.
Reserved	This field is reserved. This read-only field is reserved and always has the value 0.

18.3.1.2 MTB Master Register (MTB_MASTER)

The MTB_MASTER register contains the main program trace enable plus other trace controls. This register can be modified by the explicit programming model writes. MTB_MASTER[EN] and MTB_MASTER[HALTREQ] fields are also automatically updated by the MTB hardware.

Before MTB_MASTER[EN] or MTB_MASTER[TSTARTEN] are set to 1, the software must initialize the MTB_POSITION and MTB_FLOW registers.

If MTB_FLOW[WATERMARK] is used to stop tracing or to halt the processor, MTB_MASTER[MASK] must still be set to a value that prevents MTB_POSITION[POINTER] from wrapping before it reaches the MTB_FLOW[WATERMARK] value.

NOTE

The format of this mask field is different than MTBDWT_MASKn[MASK].

Address: F000_0000h base + 4h offset = F000_0004h

Bit	31	30	29	28	27	26	25	24	23	22	21	20	19	18	17	16
R	EN	0														
W																
Reset	0	0	0	0	0	0	0	0	0	0	0	0	0	0	0	0

Bit	15	14	13	12	11	10	9	8	7	6	5	4	3	2	1	0
R	0						HALTREQ	RAMPRIV	SFRWPRIV	TSTOPEN	TSTARTEN	MASK				
W																
Reset	0	0	0	0	0	0	0	0	1	0	0	x*	x*	x*	x*	x*

* Notes:

- x = Undefined at reset.

MTB_MASTER field descriptions

Field	Description
31 EN	Main Trace Enable When this field is 1, trace data is written into the RAM memory location addressed by MTB_POSITION[POINTER]. The MTB_POSITION[POINTER] value auto increments after the trace data packet is written. EN can be automatically set to 0 using the MTB_FLOW[WATERMARK] field and the MTB_FLOW[AUTOSTOP] bit. EN is automatically set to 1 if TSTARTEN is 1 and the TSTART signal is HIGH. EN is automatically set to 0 if TSTOPEN is 1 and the TSTOP signal is HIGH. **NOTE:** If EN is set to 0 because MTB_FLOW[WATERMARK] is set, then it is not automatically set to 1 if TSTARTEN is 1 and the TSTART input is HIGH. In this case, tracing can only be restarted if MTB_FLOW[WATERMARK] or MTB_POSITION[POINTER] value is changed by software.
30–10 Reserved	This field is reserved. This read-only field is reserved and always has the value 0.
9 HALTREQ	Halt Request This field is connected to the halt request signal of the trace logic, EDBGRQ. When HALTREQ is set to 1, the EDBFGRQ is asserted if DBGEN (invasive debug enable, one of the debug authentication interface signals) is also HIGH. HALTREQ can be automatically set to 1 using MTB_FLOW[WATERMARK].
8 RAMPRIV	RAM Privilege If this field is 0, then user or privileged AHB read and write accesses to the RAM are permitted. If this field is 1, then only privileged AHB read and write accesses to the RAM are permitted and user accesses are RAZ/WI. The HPROT[1] signal determines if an access is a user or privileged mode reference.

Table continues on the next page...

MTB_MASTER field descriptions (continued)

Field	Description
7 SFRWPRIV	Special Function Register Write Privilege If this field is 0, then user or privileged AHB read and write accesses to the MTB_RAM Special Function Registers (programming model) are permitted. If this field is 1, then only privileged write accesses are permitted; user write accesses are ignored. The HPROT[1] signal determines if an access is user or privileged. Note MTB_RAM SFR read access are not controlled by this bit and are always permitted.
6 TSTOPEN	Trace Stop Input Enable If this field is 1 and the TSTOP signal is HIGH, then EN is set to 0. If a trace packet is being written to memory, the write is completed before tracing is stopped.
5 TSTARTEN	Trace Start Input Enable If this field is 1 and the TSTART signal is HIGH, then EN is set to 1. Tracing continues until a stop condition occurs.
MASK	Mask This value determines the maximum size of the trace buffer in RAM. It specifies the most-significant bit of the MTB_POSITION[POINTER] field that can be updated by automatic increment. If the trace tries to advance past this power of two, the MTB_POSITION[WRAP] bit is set to 1, the MTB_POSITION[MASK +3:3] == MTB_POSITION[POINTER[MASK:0]] bits are set to zero, and the MTB_POSITION[14:MASK+3] == MTB_POSITION[POINTER[11:MASK+1]] bits remain unchanged. This field causes the trace packet information to be stored in a circular buffer of size 2^[MASK+4] bytes, that can be positioned in memory at multiples of this size. As detailed in the MTB_POSITION description, typical "upper limits" for the MTB size are RAM_Size/4 or RAM_Size/2. Values greater than the maximum have the same effect as the maximum.

18.3.1.3 MTB Flow Register (MTB_FLOW)

The MTB_FLOW register contains the watermark address and the autostop/autohalt control bits.

If tracing is stopped using the watermark autostop feature, it cannot be restarted until software clears the watermark autostop. This can be achieved in one of the following ways:

- Changing the MTB_POSITION[POINTER] field value to point to the beginning of the trace buffer, or
- Setting MTB_FLOW[AUTOSTOP] = 0.

A debug agent can use MTB_FLOW[AUTOSTOP] to fill the trace buffer once only without halting the processor.

A debug agent can use MTB_FLOW[AUTOHALT] to fill the trace buffer once before causing the Cortex-M0+ processor to enter the Debug state. To enter Debug state, the Cortex-M0+ processor might have to perform additional branch type operations. Therefore, the MTB_FLOW[WATERMARK] field must be set below the final entry in the trace buffer region.

Address: F000_0000h base + 8h offset = F000_0008h

Bit	31	30	29	28	27	26	25	24	23	22	21	20	19	18	17	16
R W	WATERMARK															
Reset	x*	x*	x*	x*	x*	x*	x*	x*	x*	x*	x*	x*	x*	x*	x*	x*

Bit	15	14	13	12	11	10	9	8	7	6	5	4	3	2	1	0
R W	WATERMARK													0	AUTOHALT	AUTOSTOP
Reset	x*	x*	x*	x*	x*	x*	x*	x*	x*	x*	x*	x*	x*	0	x*	x*

* Notes:
- x = Undefined at reset.

MTB_FLOW field descriptions

Field	Description
31–3 WATERMARK	WATERMARK[28:0] This field contains an address in the same format as the MTB_POSITION[POINTER] field. When MTB_POSITION[POINTER] matches the WATERMARK field value, actions defined by the AUTOHALT and AUTOSTOP bits are performed.
2 Reserved	This field is reserved. This read-only field is reserved and always has the value 0.
1 AUTOHALT	If this field is 1 and WATERMARK is equal to MTB_POSITION[POINTER], then MTB_MASTER[HALTREQ] is automatically set to 1. If the DBGEN signal is HIGH, the MTB asserts this halt request to the Cortex-M0+ processor by asserting the EDBGRQ signal.
0 AUTOSTOP	If this field is 1 and WATERMARK is equal to MTB_POSITION[POINTER], then MTB_MASTER[EN] is automatically set to 0. This stops tracing.

18.3.1.4 MTB Base Register (MTB_BASE)

The read-only MTB_BASE Register indicates where the RAM is located in the system memory map. This register is provided to enable auto discovery of the MTB RAM location, by a debug agent and is defined by a hardware design parameter. For this device, the base address is defined by the expression: MTB_BASE[BASEADDR] = 0x2000_0000 - (RAM_Size/4)

Address: F000_0000h base + Ch offset = F000_000Ch

Bit	31	30	29	28	27	26	25	24	23	22	21	20	19	18	17	16	15	14	13	12	11	10	9	8	7	6	5	4	3	2	1	0
R	BASEADDR																															
W																																
Reset	x*	x*	x*	x*	x*	x*	x*	x*	x*	x*	x*	x*	x*	x*	x*	x*	x*	x*	x*	x*	x*	x*	x*	x*	x*	x*	x*	x*	x*	x*	x*	x*

* Notes:

- x = Undefined at reset.

MTB_BASE field descriptions

Field	Description
BASEADDR	This value is defined with a hardwired signal and the expression: 0x2000_0000 - (RAM_Size/4). For example, if the total RAM capacity is 16 KB, this field is 0x1FFF_F000.

18.3.1.5 Integration Mode Control Register (MTB_MODECTRL)

This register enables the device to switch from a functional mode, or default behavior, into integration mode. It is hardwired to specific values used during the auto-discovery process by an external debug agent.

Address: F000_0000h base + F00h offset = F000_0F00h

Bit	31	30	29	28	27	26	25	24	23	22	21	20	19	18	17	16	15	14	13	12	11	10	9	8	7	6	5	4	3	2	1	0
R	MODECTRL																															
W																																
Reset	0	0	0	0	0	0	0	0	0	0	0	0	0	0	0	0	0	0	0	0	0	0	0	0	0	0	0	0	0	0	0	0

MTB_MODECTRL field descriptions

Field	Description
MODECTRL	Hardwired to 0x0000_0000

18.3.1.6 Claim TAG Set Register (MTB_TAGSET)

The Claim Tag Set Register returns the number of bits that can be set on a read, and enables individual bits to be set on a write. It is hardwired to specific values used during the auto-discovery process by an external debug agent.

Address: F000_0000h base + FA0h offset = F000_0FA0h

Bit	31	30	29	28	27	26	25	24	23	22	21	20	19	18	17	16	15	14	13	12	11	10	9	8	7	6	5	4	3	2	1	0
R	TAGSET																															
W																																
Reset	0	0	0	0	0	0	0	0	0	0	0	0	0	0	0	0	0	0	0	0	0	0	0	0	0	0	0	0	0	0	0	0

MTB_TAGSET field descriptions

Field	Description
TAGSET	Hardwired to 0x0000_0000

18.3.1.7 Claim TAG Clear Register (MTB_TAGCLEAR)

The read/write Claim Tag Clear Register is used to read the claim status on debug resources. A read indicates the claim tag status. Writing 1 to a specific bit clears the corresponding claim tag to 0. It is hardwired to specific values used during the auto-discovery process by an external debug agent.

Address: F000_0000h base + FA4h offset = F000_0FA4h

Bit	31	30	29	28	27	26	25	24	23	22	21	20	19	18	17	16	15	14	13	12	11	10	9	8	7	6	5	4	3	2	1	0
R	TAGCLEAR																															
W																																
Reset	0	0	0	0	0	0	0	0	0	0	0	0	0	0	0	0	0	0	0	0	0	0	0	0	0	0	0	0	0	0	0	0

MTB_TAGCLEAR field descriptions

Field	Description
TAGCLEAR	Hardwired to 0x0000_0000

18.3.1.8 Lock Access Register (MTB_LOCKACCESS)

The Lock Access Register enables a write access to component registers. It is hardwired to specific values used during the auto-discovery process by an external debug agent.

Address: F000_0000h base + FB0h offset = F000_0FB0h

Bit	31	30	29	28	27	26	25	24	23	22	21	20	19	18	17	16	15	14	13	12	11	10	9	8	7	6	5	4	3	2	1	0
R	LOCKACCESS																															
W																																
Reset	0	0	0	0	0	0	0	0	0	0	0	0	0	0	0	0	0	0	0	0	0	0	0	0	0	0	0	0	0	0	0	0

MTB_LOCKACCESS field descriptions

Field	Description
LOCKACCESS	Hardwired to 0x0000_0000

18.3.1.9 Lock Status Register (MTB_LOCKSTAT)

The Lock Status Register indicates the status of the lock control mechanism. This register is used in conjunction with the Lock Access Register. It is hardwired to specific values used during the auto-discovery process by an external debug agent.

Address: F000_0000h base + FB4h offset = F000_0FB4h

Bit	31	30	29	28	27	26	25	24	23	22	21	20	19	18	17	16	15	14	13	12	11	10	9	8	7	6	5	4	3	2	1	0
R	LOCKSTAT																															
W																																
Reset	0	0	0	0	0	0	0	0	0	0	0	0	0	0	0	0	0	0	0	0	0	0	0	0	0	0	0	0	0	0	0	0

MTB_LOCKSTAT field descriptions

Field	Description
LOCKSTAT	Hardwired to 0x0000_0000

18.3.1.10 Authentication Status Register (MTB_AUTHSTAT)

The Authentication Status Register reports the required security level and current status of the security enable bit pairs. Where functionality changes on a given security level, this change must be reported in this register. It is connected to specific signals used during the auto-discovery process by an external debug agent.

MTB_AUTHSTAT[3:2] indicates if nonsecure, noninvasive debug is enabled or disabled, while MTB_AUTHSTAT[1:0] indicates the enabled/disabled state of nonsecure, invasive debug. For both 2-bit fields, 0b10 indicates the functionality is disabled and 0b11 indicates it is enabled.

Address: F000_0000h base + FB8h offset = F000_0FB8h

Bit	31	30	29	28	27	26	25	24	23	22	21	20	19	18	17	16
R	0															
W																
Reset	0	0	0	0	0	0	0	0	0	0	0	0	0	0	0	0

Bit	15	14	13	12	11	10	9	8	7	6	5	4	3	2	1	0
R	0												1	BIT2	1	BIT0
W																
Reset	0	0	0	0	0	0	0	0	0	0	0	0	0	0	0	0

MTB_AUTHSTAT field descriptions

Field	Description
31–4 Reserved	This field is reserved. This read-only field is reserved and always has the value 0.
3 Reserved	This read-only field is reserved and always has the value 1.
2 BIT2	Connected to NIDEN or DBGEN signal.
1 Reserved	This read-only field is reserved and always has the value 1.
0 BIT0	Connected to DBGEN.

18.3.1.11 Device Architecture Register (MTB_DEVICEARCH)

This register indicates the device architecture. It is hardwired to specific values used during the auto-discovery process by an external debug agent.

Address: F000_0000h base + FBCh offset = F000_0FBCh

Bit	31	30	29	28	27	26	25	24	23	22	21	20	19	18	17	16	15	14	13	12	11	10	9	8	7	6	5	4	3	2	1	0
R	DEVICEARCH																															
W																																
Reset	0	1	0	0	0	1	1	1	0	1	1	1	0	0	0	0	0	0	0	0	1	0	1	0	0	0	1	1	0	0	0	1

MTB_DEVICEARCH field descriptions

Field	Description
DEVICEARCH	Hardwired to 0x4770_0A31.

18.3.1.12 Device Configuration Register (MTB_DEVICECFG)

This register indicates the device configuration. It is hardwired to specific values used during the auto-discovery process by an external debug agent.

Address: F000_0000h base + FC8h offset = F000_0FC8h

Bit	31	30	29	28	27	26	25	24	23	22	21	20	19	18	17	16	15	14	13	12	11	10	9	8	7	6	5	4	3	2	1	0
R	DEVICECFG																															
W																																
Reset	0	0	0	0	0	0	0	0	0	0	0	0	0	0	0	0	0	0	0	0	0	0	0	0	0	0	0	0	0	0	0	0

MTB_DEVICECFG field descriptions

Field	Description
DEVICECFG	Hardwired to 0x0000_0000.

18.3.1.13 Device Type Identifier Register (MTB_DEVICETYPID)

This register indicates the device type ID. It is hardwired to specific values used during the auto-discovery process by an external debug agent.

Address: F000_0000h base + FCCh offset = F000_0FCCh

Bit	31	30	29	28	27	26	25	24	23	22	21	20	19	18	17	16	15	14	13	12	11	10	9	8	7	6	5	4	3	2	1	0
R	DEVICETYPID																															
W																																
Reset	0	0	0	0	0	0	0	0	0	0	0	0	0	0	0	0	0	0	0	0	0	0	0	0	0	0	1	1	0	0	0	1

MTB_DEVICETYPID field descriptions

Field	Description
DEVICETYPID	Hardwired to 0x0000_0031.

18.3.1.14 Peripheral ID Register (MTB_PERIPHID*n*)

These registers indicate the peripheral IDs. They are hardwired to specific values used during the auto-discovery process by an external debug agent.

Address: F000_0000h base + FD0h offset + (4d × i), where i=0d to 7d

Bit	31	30	29	28	27	26	25	24	23	22	21	20	19	18	17	16	15	14	13	12	11	10	9	8	7	6	5	4	3	2	1	0
R	PERIPHID																															
W																																
Reset	x*	x*	x*	x*	x*	x*	x*	x*	x*	x*	x*	x*	x*	x*	x*	x*	x*	x*	x*	x*	x*	x*	x*	x*	x*	x*	x*	x*	x*	x*	x*	x*

* Notes:
- See field descriptions for the reset values.x = Undefined at reset.

MTB_PERIPHID*n* field descriptions

Field	Description
PERIPHID	Peripheral ID4 is hardwired to 0x0000_0004; ID0 to 0x0000_0032; ID1 to 0x0000_00B9; ID2 to 0x0000_000B; and all the others to 0x0000_0000.

18.3.1.15 Component ID Register (MTB_COMPID*n*)

These registers indicate the component IDs. They are hardwired to specific values used during the auto-discovery process by an external debug agent.

Address: F000_0000h base + FF0h offset + (4d × i), where i=0d to 3d

Bit	31	30	29	28	27	26	25	24	23	22	21	20	19	18	17	16	15	14	13	12	11	10	9	8	7	6	5	4	3	2	1	0
R	COMPID																															
W																																
Reset	x*	x*	x*	x*	x*	x*	x*	x*	x*	x*	x*	x*	x*	x*	x*	x*	x*	x*	x*	x*	x*	x*	x*	x*	x*	x*	x*	x*	x*	x*	x*	x*

* Notes:
- See field descriptions for the reset values.x = Undefined at reset.

MTB_COMPID*n* field descriptions

Field	Description
COMPID	Component ID Component ID0 is hardwired to 0x0000_000D; ID1 to 0x0000_0090; ID2 to 0x0000_0005; ID3 to 0x0000_00B1.

18.3.2 MTB_DWT Memory Map

The MTB_DWT programming model supports a very simplified subset of the v7M debug architecture and follows the standard ARM DWT definition.

MTBDWT memory map

Absolute address (hex)	Register name	Width (in bits)	Access	Reset value	Section/ page
F000_1000	MTB DWT Control Register (MTBDWT_CTRL)	32	R	2F00_0000h	18.3.2.1/ 244
F000_1020	MTB_DWT Comparator Register (MTBDWT_COMP0)	32	R/W	0000_0000h	18.3.2.2/ 245
F000_1024	MTB_DWT Comparator Mask Register (MTBDWT_MASK0)	32	R/W	0000_0000h	18.3.2.3/ 245
F000_1028	MTB_DWT Comparator Function Register 0 (MTBDWT_FCT0)	32	R/W	0000_0000h	18.3.2.4/ 247
F000_1030	MTB_DWT Comparator Register (MTBDWT_COMP1)	32	R/W	0000_0000h	18.3.2.2/ 245
F000_1034	MTB_DWT Comparator Mask Register (MTBDWT_MASK1)	32	R/W	0000_0000h	18.3.2.3/ 245
F000_1038	MTB_DWT Comparator Function Register 1 (MTBDWT_FCT1)	32	R/W	0000_0000h	18.3.2.5/ 249
F000_1200	MTB_DWT Trace Buffer Control Register (MTBDWT_TBCTRL)	32	R/W	2000_0000h	18.3.2.6/ 250
F000_1FC8	Device Configuration Register (MTBDWT_DEVICECFG)	32	R	0000_0000h	18.3.2.7/ 252
F000_1FCC	Device Type Identifier Register (MTBDWT_DEVICETYPID)	32	R	0000_0004h	18.3.2.8/ 252
F000_1FD0	Peripheral ID Register (MTBDWT_PERIPHID4)	32	R	See section	18.3.2.9/ 253
F000_1FD4	Peripheral ID Register (MTBDWT_PERIPHID5)	32	R	See section	18.3.2.9/ 253
F000_1FD8	Peripheral ID Register (MTBDWT_PERIPHID6)	32	R	See section	18.3.2.9/ 253
F000_1FDC	Peripheral ID Register (MTBDWT_PERIPHID7)	32	R	See section	18.3.2.9/ 253
F000_1FE0	Peripheral ID Register (MTBDWT_PERIPHID0)	32	R	See section	18.3.2.9/ 253
F000_1FE4	Peripheral ID Register (MTBDWT_PERIPHID1)	32	R	See section	18.3.2.9/ 253
F000_1FE8	Peripheral ID Register (MTBDWT_PERIPHID2)	32	R	See section	18.3.2.9/ 253
F000_1FEC	Peripheral ID Register (MTBDWT_PERIPHID3)	32	R	See section	18.3.2.9/ 253
F000_1FF0	Component ID Register (MTBDWT_COMPID0)	32	R	See section	18.3.2.10/ 253

Table continues on the next page...

MTBDWT memory map (continued)

Absolute address (hex)	Register name	Width (in bits)	Access	Reset value	Section/ page
F000_1FF4	Component ID Register (MTBDWT_COMPID1)	32	R	See section	18.3.2.10/ 253
F000_1FF8	Component ID Register (MTBDWT_COMPID2)	32	R	See section	18.3.2.10/ 253
F000_1FFC	Component ID Register (MTBDWT_COMPID3)	32	R	See section	18.3.2.10/ 253

18.3.2.1 MTB DWT Control Register (MTBDWT_CTRL)

The MTBDWT_CTRL register provides read-only information on the watchpoint configuration for the MTB_DWT.

Address: F000_1000h base + 0h offset = F000_1000h

Bit	31	30	29	28	27	26	25	24	23	22	21	20	19	18	17	16	15	14	13	12	11	10	9	8	7	6	5	4	3	2	1	0
R	NUMCMP				DWTCFGCTRL																											
W																																
Reset	0	0	1	0	1	1	1	1	0	0	0	0	0	0	0	0	0	0	0	0	0	0	0	0	0	0	0	0	0	0	0	0

MTBDWT_CTRL field descriptions

Field	Description
31–28 NUMCMP	Number of comparators The MTB_DWT implements two comparators.
DWTCFGCTRL	DWT configuration controls This field is hardwired to 0xF00_0000, disabling all the remaining DWT functionality. The specific fields and their state are: MTBDWT_CTRL[27] = NOTRCPKT = 1, trace sample and exception trace is not supported MTBDWT_CTRL[26] = NOEXTTRIG = 1, external match signals are not supported MTBDWT_CTRL[25] = NOCYCCNT = 1, cycle counter is not supported MTBDWT_CTRL[24] = NOPRFCNT = 1, profiling counters are not supported MTBDWT_CTRL[22] = CYCEBTENA = 0, no POSTCNT underflow packets generated MTBDWT_CTRL[21] = FOLDEVTENA = 0, no folded instruction counter overflow events MTBDWT_CTRL[20] = LSUEVTENA = 0, no LSU counter overflow events MTBDWT_CTRL[19] = SLEEPEVTENA = 0, no sleep counter overflow events MTBDWT_CTRL[18] = EXCEVTENA = 0, no exception overhead counter events MTBDWT_CTRL[17] = CPIEVTENA = 0, no CPI counter overflow events MTBDWT_CTRL[16] = EXCTRCENA = 0, generation of exception trace disabled MTBDWT_CTRL[12] = PCSAMPLENA = 0, no periodic PC sample packets generated

Table continues on the next page...

MTBDWT_CTRL field descriptions (continued)

Field	Description
	MTBDWT_CTRL[11:10] = SYNCTAP = 0, no synchronization packets MTBDWT_CTRL[9] = CYCTAP = 0, cycle counter is not supported MTBDWT_CTRL[8:5] = POSTINIT = 0, cycle counter is not supported MTBDWT_CTRL[4:1] = POSTPRESET = 0, cycle counter is not supported MTBDWT_CTRL[0] = CYCCNTENA = 0, cycle counter is not supported

18.3.2.2 MTB_DWT Comparator Register (MTBDWT_COMP*n*)

The MTBDWT_COMPn registers provide the reference value for comparator n.

Address: F000_1000h base + 20h offset + (16d × i), where i=0d to 1d

Bit	31	30	29	28	27	26	25	24	23	22	21	20	19	18	17	16	15	14	13	12	11	10	9	8	7	6	5	4	3	2	1	0
R W	COMP																															
Reset	0	0	0	0	0	0	0	0	0	0	0	0	0	0	0	0	0	0	0	0	0	0	0	0	0	0	0	0	0	0	0	0

MTBDWT_COMP*n* field descriptions

Field	Description
COMP	Reference value for comparison If MTBDWT_COMP0 is used for a data value comparator and the access size is byte or halfword, the data value must be replicated across all appropriate byte lanes of this register. For example, if the data is a byte-sized "x" value, then COMP[31:24] = COMP[23:16] = COMP[15:8] = COMP[7:0] = "x". Likewise, if the data is a halfword-size "y" value, then COMP[31:16] = COMP[15:0] = "y".

18.3.2.3 MTB_DWT Comparator Mask Register (MTBDWT_MASK*n*)

The MTBDWT_MASKn registers define the size of the ignore mask applied to the reference address for address range matching by comparator n. Note the format of this mask field is different than the MTB_MASTER[MASK].

Address: F000_1000h base + 24h offset + (16d × i), where i=0d to 1d

Bit	31	30	29	28	27	26	25	24	23	22	21	20	19	18	17	16	15	14	13	12	11	10	9	8	7	6	5	4	3	2	1	0
R	0																											MASK				
W																																
Reset	0	0	0	0	0	0	0	0	0	0	0	0	0	0	0	0	0	0	0	0	0	0	0	0	0	0	0	0	0	0	0	0

MTBDWT_MASK*n* field descriptions

Field	Description
31–5 Reserved	This field is reserved. This read-only field is reserved and always has the value 0.
MASK	MASK The value of the ignore mask, 0-31 bits, is applied to address range matching. MASK = 0 is used to include all bits of the address in the comparison, except if MASK = 0 and the comparator is configured to watch instruction fetch addresses, address bit [0] is ignored by the hardware since all fetches must be at least halfword aligned. For MASK != 0 and regardless of watch type, address bits [x-1:0] are ignored in the address comparison. Using a mask means the comparator matches on a range of addresses, defined by the unmasked most significant bits of the address, bits [31:x]. The maximum MASK value is 24, producing a 16 Mbyte mask. An attempted write of a MASK value > 24 is limited by the MTBDWT hardware to 24. If MTBDWT_COMP0 is used as a data value comparator, then MTBDWT_MASK0 should be programmed to zero.

18.3.2.4 MTB_DWT Comparator Function Register 0 (MTBDWT_FCT0)

The MTBDWT_FCTn registers control the operation of comparator n.

Address: F000_1000h base + 28h offset = F000_1028h

Bit	31	30	29	28	27	26	25	24	23	22	21	20	19	18	17	16
R	0							MATCHED	0				0			
W																
Reset	0	0	0	0	0	0	0	0	0	0	0	0	0	0	0	0

Bit	15	14	13	12	11	10	9	8	7	6	5	4	3	2	1	0
R	DATAVADDR0				DATAVSIZE		0	DATAVMATCH	0				FUNCTION			
W																
Reset	0	0	0	0	0	0	0	0	0	0	0	0	0	0	0	0

MTBDWT_FCT0 field descriptions

Field	Description
31–25 Reserved	This field is reserved. This read-only field is reserved and always has the value 0.
24 MATCHED	Comparator match If this read-only flag is asserted, it indicates the operation defined by the FUNCTION field occurred since the last read of the register. Reading the register clears this bit. 0 No match. 1 Match occurred.

Table continues on the next page...

MTBDWT_FCT0 field descriptions (continued)

Field	Description
23–20 Reserved	This field is reserved. This read-only field is reserved and always has the value 0.
19–16 Reserved	This field is reserved. This read-only field is reserved and always has the value 0.
15–12 DATAVADDR0	Data Value Address 0 Since the MTB_DWT implements two comparators, the DATAVADDR0 field is restricted to values {0,1}. When the DATAVMATCH bit is asserted, this field defines the comparator number to use for linked address comparison. If MTBDWT_COMP0 is used as a data watchpoint and MTBDWT_COMP1 as an address watchpoint, DATAVADDR0 must be set.
11–10 DATAVSIZE	Data Value Size For data value matching, this field defines the size of the required data comparison. 00 Byte. 01 Halfword. 10 Word. 11 Reserved. Any attempts to use this value results in UNPREDICTABLE behavior.
9 Reserved	This field is reserved. This read-only field is reserved and always has the value 0.
8 DATAVMATCH	Data Value Match When this field is 1, it enables data value comparison. For this implementation, MTBDWT_COMP0 supports address or data value comparisons; MTBDWT_COMP1 only supports address comparisons. 0 Perform address comparison. 1 Perform data value comparison.
7–4 Reserved	This field is reserved. This read-only field is reserved and always has the value 0.
FUNCTION	Function Selects the action taken on a comparator match. If MTBDWT_COMP0 is used for a data value and MTBDWT_COMP1 for an address value, then MTBDWT_FCT1[FUNCTION] must be set to zero. For this configuration, MTBDWT_MASK1 can be set to a non-zero value, so the combined comparators match on a range of addresses. 0000 Disabled. 0100 Instruction fetch. 0101 Data operand read. 0110 Data operand write. 0111 Data operand (read + write). others Reserved. Any attempts to use this value results in UNPREDICTABLE behavior.

18.3.2.5 MTB_DWT Comparator Function Register 1 (MTBDWT_FCT1)

The MTBDWT_FCTn registers control the operation of comparator n. Since the MTB_DWT only supports data value comparisons on comparator 0, there are several fields in the MTBDWT_FCT1 register that are RAZ/WI (bits 12, 11:10, 8).

Address: F000_1000h base + 38h offset = F000_1038h

Bit	31	30	29	28	27	26	25	24	23	22	21	20	19	18	17	16
R	0							MATCHED	0							
W																
Reset	0	0	0	0	0	0	0	0	0	0	0	0	0	0	0	0

Bit	15	14	13	12	11	10	9	8	7	6	5	4	3	2	1	0
R	0												FUNCTION			
W																
Reset	0	0	0	0	0	0	0	0	0	0	0	0	0	0	0	0

MTBDWT_FCT1 field descriptions

Field	Description
31–25 Reserved	This field is reserved. This read-only field is reserved and always has the value 0.
24 MATCHED	Comparator match If this read-only flag is asserted, it indicates the operation defined by the FUNCTION field occurred since the last read of the register. Reading the register clears this bit.

Table continues on the next page...

MTBDWT_FCT1 field descriptions (continued)

Field	Description
	0 No match. 1 Match occurred.
23–4 Reserved	This field is reserved. This read-only field is reserved and always has the value 0.
FUNCTION	Function Selects the action taken on a comparator match. If MTBDWT_COMP0 is used for a data value and MTBDWT_COMP1 for an address value, then MTBDWT_FCT1[FUNCTION] must be set to zero. For this configuration, MTBDWT_MASK1 can be set to a non-zero value, so the combined comparators match on a range of addresses. 0000 Disabled. 0100 Instruction fetch. 0101 Data operand read. 0110 Data operand write. 0111 Data operand (read + write). others Reserved. Any attempts to use this value results in UNPREDICTABLE behavior.

18.3.2.6 MTB_DWT Trace Buffer Control Register (MTBDWT_TBCTRL)

The MTBDWT_TBCTRL register defines how the watchpoint comparisons control the actual trace buffer operation.

Recall the MTB supports starting and stopping the program trace based on the watchpoint comparisons signaled via TSTART and TSTOP. The watchpoint comparison signals are enabled in the MTB's control logic by setting the appropriate enable bits, MTB_MASTER[TSTARTEN, TSTOPEN]. In the event of simultaneous assertion of both TSTART and TSTOP, TSTART takes priority.

Address: F000_1000h base + 200h offset = F000_1200h

Bit	31	30	29	28	27	26	25	24	23	22	21	20	19	18	17	16
R	NUMCOMP				0											
W																
Reset	0	0	1	0	0	0	0	0	0	0	0	0	0	0	0	0

Bit	15	14	13	12	11	10	9	8	7	6	5	4	3	2	1	0
R	0														ACOMP1	ACOMP0
W																
Reset	0	0	0	0	0	0	0	0	0	0	0	0	0	0	0	0

MTBDWT_TBCTRL field descriptions

Field	Description
31–28 NUMCOMP	Number of Comparators This read-only field specifies the number of comparators in the MTB_DWT. This implementation includes two registers.
27–2 Reserved	This field is reserved. This read-only field is reserved and always has the value 0.
1 ACOMP1	Action based on Comparator 1 match When the MTBDWT_FCT1[MATCHED] is set, it indicates MTBDWT_COMP1 address compare has triggered and the trace buffer's recording state is changed. 0 Trigger TSTOP based on the assertion of MTBDWT_FCT1[MATCHED]. 1 Trigger TSTART based on the assertion of MTBDWT_FCT1[MATCHED].
0 ACOMP0	Action based on Comparator 0 match When the MTBDWT_FCT0[MATCHED] is set, it indicates MTBDWT_COMP0 address compare has triggered and the trace buffer's recording state is changed. The assertion of MTBDWT_FCT0[MATCHED] is caused by the following conditions: • Address match in MTBDWT_COMP0 when MTBDWT_FCT0[DATAVMATCH] = 0 • Data match in MTBDWT_COMP0 when MTBDWT_FCT0[DATAVMATCH, DATAVADDR0] = {1,0} • Data match in MTBDWT_COMP0 and address match in MTBDWT_COMP1 when MTBDWT_FCT0[DATAVMATCH, DATAVADDR0] = {1,1} 0 Trigger TSTOP based on the assertion of MTBDWT_FCT0[MATCHED]. 1 Trigger TSTART based on the assertion of MTBDWT_FCT0[MATCHED].

18.3.2.7 Device Configuration Register (MTBDWT_DEVICECFG)

This register indicates the device configuration. It is hardwired to specific values used during the auto-discovery process by an external debug agent.

Address: F000_1000h base + FC8h offset = F000_1FC8h

Bit	31	30	29	28	27	26	25	24	23	22	21	20	19	18	17	16	15	14	13	12	11	10	9	8	7	6	5	4	3	2	1	0
R	DEVICECFG																															
W																																
Reset	0	0	0	0	0	0	0	0	0	0	0	0	0	0	0	0	0	0	0	0	0	0	0	0	0	0	0	0	0	0	0	0

MTBDWT_DEVICECFG field descriptions

Field	Description
DEVICECFG	Hardwired to 0x0000_0000.

18.3.2.8 Device Type Identifier Register (MTBDWT_DEVICETYPID)

This register indicates the device type ID. It is hardwired to specific values used during the auto-discovery process by an external debug agent.

Address: F000_1000h base + FCCh offset = F000_1FCCh

Bit	31	30	29	28	27	26	25	24	23	22	21	20	19	18	17	16	15	14	13	12	11	10	9	8	7	6	5	4	3	2	1	0
R	DEVICETYPID																															
W																																
Reset	0	0	0	0	0	0	0	0	0	0	0	0	0	0	0	0	0	0	0	0	0	0	0	0	0	0	0	0	0	1	0	0

MTBDWT_DEVICETYPID field descriptions

Field	Description
DEVICETYPID	Hardwired to 0x0000_0004.

18.3.2.9 Peripheral ID Register (MTBDWT_PERIPHID*n*)

These registers indicate the peripheral IDs. They are hardwired to specific values used during the auto-discovery process by an external debug agent.

Address: F000_1000h base + FD0h offset + (4d × i), where i=0d to 7d

Bit	31	30	29	28	27	26	25	24	23	22	21	20	19	18	17	16	15	14	13	12	11	10	9	8	7	6	5	4	3	2	1	0
R	PERIPHID																															
W																																
Reset	x*	x*	x*	x*	x*	x*	x*	x*	x*	x*	x*	x*	x*	x*	x*	x*	x*	x*	x*	x*	x*	x*	x*	x*	x*	x*	x*	x*	x*	x*	x*	x*

* Notes:
- See field descriptions for the reset values. x = Undefined at reset.

MTBDWT_PERIPHID*n* field descriptions

Field	Description
PERIPHID	Peripheral ID1 is hardwired to 0x0000_00E0; ID2 to 0x0000_0008; and all the others to 0x0000_0000.

18.3.2.10 Component ID Register (MTBDWT_COMPID*n*)

These registers indicate the component IDs. They are hardwired to specific values used during the auto-discovery process by an external debug agent.

Address: F000_1000h base + FF0h offset + (4d × i), where i=0d to 3d

Bit	31	30	29	28	27	26	25	24	23	22	21	20	19	18	17	16	15	14	13	12	11	10	9	8	7	6	5	4	3	2	1	0
R	COMPID																															
W																																
Reset	x*	x*	x*	x*	x*	x*	x*	x*	x*	x*	x*	x*	x*	x*	x*	x*	x*	x*	x*	x*	x*	x*	x*	x*	x*	x*	x*	x*	x*	x*	x*	x*

* Notes:
- See field descriptions for the reset values.x = Undefined at reset.

MTBDWT_COMPID*n* field descriptions

Field	Description
COMPID	Component ID Component ID0 is hardwired to 0x0000_000D; ID1 to 0x0000_0090; ID2 to 0x0000_0005; ID3 to 0x0000_00B1.

18.3.3 System ROM Memory Map

The System ROM Table registers are also mapped into a sparsely-populated 4 KB address space.

For core configurations like that supported by Cortex-M0+, ARM recommends that a debugger identifies and connects to the debug components using the CoreSight debug infrastructure.

ARM recommends that a debugger follows the flow as shown in the following figure to discover the components in the CoreSight debug infrastructure. In this case, a debugger reads the peripheral and component ID registers for each CoreSight component in the CoreSight system.

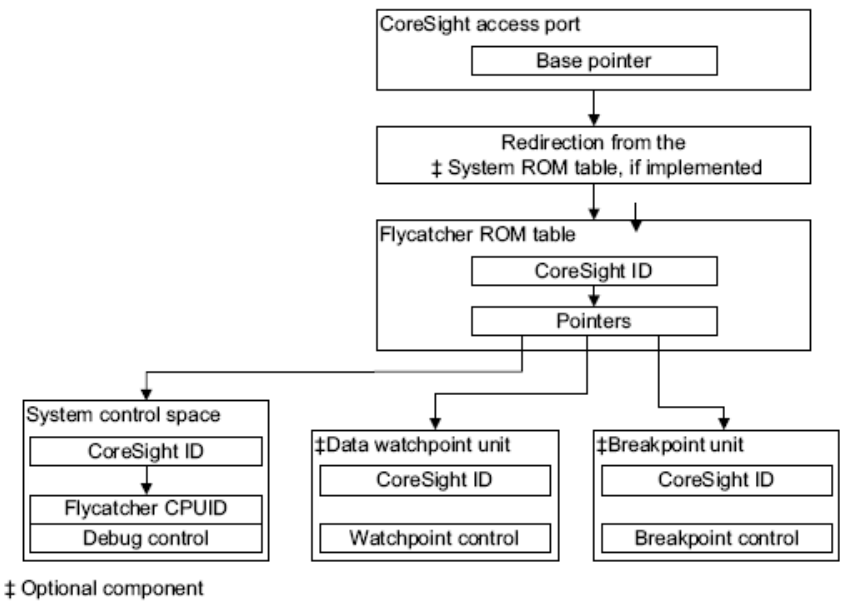

Figure 18-56. CoreSight discovery process

ROM memory map

Absolute address (hex)	Register name	Width (in bits)	Access	Reset value	Section/ page
F000_2000	Entry (ROM_ENTRY0)	32	R	See section	18.3.3.1/ 255
F000_2004	Entry (ROM_ENTRY1)	32	R	See section	18.3.3.1/ 255
F000_2008	Entry (ROM_ENTRY2)	32	R	See section	18.3.3.1/ 255
F000_200C	End of Table Marker Register (ROM_TABLEMARK)	32	R	0000_0000h	18.3.3.2/ 256
F000_2FCC	System Access Register (ROM_SYSACCESS)	32	R	0000_0001h	18.3.3.3/ 256

Table continues on the next page...

ROM memory map (continued)

Absolute address (hex)	Register name	Width (in bits)	Access	Reset value	Section/ page
F000_2FD0	Peripheral ID Register (ROM_PERIPHID4)	32	R	See section	18.3.3.4/ 257
F000_2FD4	Peripheral ID Register (ROM_PERIPHID5)	32	R	See section	18.3.3.4/ 257
F000_2FD8	Peripheral ID Register (ROM_PERIPHID6)	32	R	See section	18.3.3.4/ 257
F000_2FDC	Peripheral ID Register (ROM_PERIPHID7)	32	R	See section	18.3.3.4/ 257
F000_2FE0	Peripheral ID Register (ROM_PERIPHID0)	32	R	See section	18.3.3.4/ 257
F000_2FE4	Peripheral ID Register (ROM_PERIPHID1)	32	R	See section	18.3.3.4/ 257
F000_2FE8	Peripheral ID Register (ROM_PERIPHID2)	32	R	See section	18.3.3.4/ 257
F000_2FEC	Peripheral ID Register (ROM_PERIPHID3)	32	R	See section	18.3.3.4/ 257
F000_2FF0	Component ID Register (ROM_COMPID0)	32	R	See section	18.3.3.5/ 257
F000_2FF4	Component ID Register (ROM_COMPID1)	32	R	See section	18.3.3.5/ 257
F000_2FF8	Component ID Register (ROM_COMPID2)	32	R	See section	18.3.3.5/ 257
F000_2FFC	Component ID Register (ROM_COMPID3)	32	R	See section	18.3.3.5/ 257

18.3.3.1 Entry (ROM_ENTRY*n*)

The System ROM Table begins with "n" relative 32-bit addresses, one for each debug component present in the device and terminating with an all-zero value signaling the end of the table at the "n+1"-th value.

It is hardwired to specific values used during the auto-discovery process by an external debug agent.

Address: F000_2000h base + 0h offset + (4d × i), where i=0d to 2d

Bit	31	30	29	28	27	26	25	24	23	22	21	20	19	18	17	16	15	14	13	12	11	10	9	8	7	6	5	4	3	2	1	0
R	ENTRY																															
W																																
Reset	x*	x*	x*	x*	x*	x*	x*	x*	x*	x*	x*	x*	x*	x*	x*	x*	x*	x*	x*	x*	x*	x*	x*	x*	x*	x*	x*	x*	x*	x*	x*	x*

* Notes:
- See field descriptions for reset values.x = Undefined at reset.

ROM_ENTRY*n* field descriptions

Field	Description
ENTRY	ENTRY Entry 0 (MTB) is hardwired to 0xFFFF_E003; Entry 1 (MTBDWT) to 0xFFFF_F003; Entry 2 (CM0+ ROM Table) to 0xF00F_D003.

18.3.3.2 End of Table Marker Register (ROM_TABLEMARK)

This register indicates end of table marker. It is hardwired to specific values used during the auto-discovery process by an external debug agent.

Address: F000_2000h base + Ch offset = F000_200Ch

Bit	31	30	29	28	27	26	25	24	23	22	21	20	19	18	17	16	15	14	13	12	11	10	9	8	7	6	5	4	3	2	1	0
R	MARK																															
W																																
Reset	0	0	0	0	0	0	0	0	0	0	0	0	0	0	0	0	0	0	0	0	0	0	0	0	0	0	0	0	0	0	0	0

ROM_TABLEMARK field descriptions

Field	Description
MARK	Hardwired to 0x0000_0000

18.3.3.3 System Access Register (ROM_SYSACCESS)

This register indicates system access. It is hardwired to specific values used during the auto-discovery process by an external debug agent.

Address: F000_2000h base + FCCh offset = F000_2FCCh

Bit	31	30	29	28	27	26	25	24	23	22	21	20	19	18	17	16	15	14	13	12	11	10	9	8	7	6	5	4	3	2	1	0
R	SYSACCESS																															
W																																
Reset	0	0	0	0	0	0	0	0	0	0	0	0	0	0	0	0	0	0	0	0	0	0	0	0	0	0	0	0	0	0	0	1

ROM_SYSACCESS field descriptions

Field	Description
SYSACCESS	Hardwired to 0x0000_0001

18.3.3.4 Peripheral ID Register (ROM_PERIPHID*n*)

These registers indicate the peripheral IDs. They are hardwired to specific values used during the auto-discovery process by an external debug agent.

Address: F000_2000h base + FD0h offset + (4d × i), where i=0d to 7d

Bit	31	30	29	28	27	26	25	24	23	22	21	20	19	18	17	16	15	14	13	12	11	10	9	8	7	6	5	4	3	2	1	0
R	PERIPHID																															
W																																
Reset	x*	x*	x*	x*	x*	x*	x*	x*	x*	x*	x*	x*	x*	x*	x*	x*	x*	x*	x*	x*	x*	x*	x*	x*	x*	x*	x*	x*	x*	x*	x*	x*

* Notes:
- See field descriptions for reset values.x = Undefined at reset.

ROM_PERIPHID*n* field descriptions

Field	Description
PERIPHID	Peripheral ID1 is hardwired to 0x0000_00E0; ID2 to 0x0000_0008; and all the others to 0x0000_0000.

18.3.3.5 Component ID Register (ROM_COMPID*n*)

These registers indicate the component IDs. They are hardwired to specific values used during the auto-discovery process by an external debug agent.

Address: F000_2000h base + FF0h offset + (4d × i), where i=0d to 3d

Bit	31	30	29	28	27	26	25	24	23	22	21	20	19	18	17	16	15	14	13	12	11	10	9	8	7	6	5	4	3	2	1	0
R	COMPID																															
W																																
Reset	x*	x*	x*	x*	x*	x*	x*	x*	x*	x*	x*	x*	x*	x*	x*	x*	x*	x*	x*	x*	x*	x*	x*	x*	x*	x*	x*	x*	x*	x*	x*	x*

* Notes:
- See field descriptions for reset values.x = Undefined at reset.

ROM_COMPID*n* field descriptions

Field	Description
COMPID	Component ID Component ID0 is hardwired to 0x0000_000D; ID1 to 0x0000_0010; ID2 to 0x0000_0005; ID3 to 0x0000_00B1.

Chapter 19
Crossbar Switch Lite (AXBS-Lite)

19.1 Introduction

NOTE

For the chip-specific implementation details of this module's instances, see the chip configuration information.

This chapter provides information on the layout, configuration, and programming of the crossbar switch. The crossbar switch connects bus masters and bus slaves using a crossbar switch structure. This structure allows up to four bus masters to access different bus slaves simultaneously, while providing arbitration among the bus masters when they access the same slave.

19.1.1 Features

The crossbar switch includes these features:

- Symmetric crossbar bus switch implementation
  - Allows concurrent accesses from different masters to different slaves
- 32-bit data bus
- Operation at a 1-to-1 clock frequency with the bus masters
- Programmable configuration for fixed-priority or round-robin slave port arbitration

19.2 Memory Map / Register Definition

This crossbar switch is designed for minimal gate count. It, therefore, has no memory-mapped configuration registers.

19.3 Functional Description

19.3.1 General operation

When a master accesses the crossbar switch the access is immediately taken. If the targeted slave port of the access is available, then the access is immediately presented on the slave port. Single-clock or zero-wait-state accesses are possible through the crossbar. If the targeted slave port of the access is busy or parked on a different master port, the requesting master simply sees wait states inserted until the targeted slave port can service the master's request. The latency in servicing the request depends on each master's priority level and the responding slave's access time.

Because the crossbar switch appears to be just another slave to the master device, the master device has no knowledge of whether it actually owns the slave port it is targeting. While the master does not have control of the slave port it is targeting, it simply waits.

A master is given control of the targeted slave port only after a previous access to a different slave port completes, regardless of its priority on the newly targeted slave port. This prevents deadlock from occurring when:

- A higher priority master has:
  - An outstanding request to one slave port that has a long response time and
  - A pending access to a different slave port, and
- A lower priority master is also making a request to the same slave port as the pending access of the higher priority master.

After the master has control of the slave port it is targeting, the master remains in control of the slave port until it relinquishes the slave port by running an IDLE cycle or by targeting a different slave port for its next access.

The master can also lose control of the slave port if another higher-priority master makes a request to the slave port.

The crossbar terminates all master IDLE transfers, as opposed to allowing the termination to come from one of the slave buses. Additionally, when no master is requesting access to a slave port, the crossbar drives IDLE transfers onto the slave bus, even though a default master may be granted access to the slave port.

When a slave bus is being idled by the crossbar, it remains parked with the last master to use the slave port. This is done to save the initial clock of arbitration delay that otherwise would be seen if the master had to arbitrate to gain control of the slave port.

19.3.2 Arbitration

The crossbar switch supports two arbitration algorithms:

- Fixed priority
- Round-robin

The selection of the global slave port arbitration is controlled by MCM_PLACR[ARB]. For fixed priority, set ARB to 0. For round robin, set ARB to 1. This arbitration setting applies to all slave ports.

19.3.2.1 Arbitration During Undefined Length Bursts

All lengths of burst accesses lock out arbitration until the last beat of the burst.

19.3.2.2 Fixed-priority operation

When operating in fixed-priority mode, each master is assigned a unique priority level with the highest numbered master having the highest priority (master 1 has lower priority than master 3). If two masters request access to the same slave port, the master with the highest priority gains control over the slave port.

NOTE

In this arbitration mode, a higher-priority master can monopolize a slave port, preventing accesses from any lower-priority master to the port.

When a master makes a request to a slave port, the slave port checks whether the new requesting master's priority level is higher than that of the master that currently has control over the slave port, unless the slave port is in a parked state. The slave port performs an arbitration check at every clock edge to ensure that the proper master, if any, has control of the slave port.

The following table describes possible scenarios based on the requesting master port:

Table 19-1. How AXBS grants control of a slave port to a master

When	Then AXBS grants control to the requesting master
Both of the following are true:	At the next clock edge

Table continues on the next page...

Table 19-1. How AXBS grants control of a slave port to a master (continued)

When	Then AXBS grants control to the requesting master
• The current master is not running a transfer. • The new requesting master's priority level is higher than that of the current master.	
The requesting master's priority level is lower than the current master.	At the conclusion of one of the following cycles: • An IDLE cycle • A non-IDLE cycle to a location other than the current slave port

19.3.2.3 Round-robin priority operation

When operating in round-robin mode, each master is assigned a relative priority based on the master port number. This relative priority is compared to the master port number (ID) of the last master to perform a transfer on the slave bus. The highest priority requesting master becomes owner of the slave bus at the next transfer boundary. Priority is based on how far ahead the ID of the requesting master is to the ID of the last master.

After granted access to a slave port, a master may perform as many transfers as desired to that port until another master makes a request to the same slave port. The next master in line is granted access to the slave port at the next transfer boundary, or possibly on the next clock cycle if the current master has no pending access request.

As an example of arbitration in round-robin mode, assume the crossbar is implemented with master ports 0, 1, 4, and 5. If the last master of the slave port was master 1, and master 0, 4, and 5 make simultaneous requests, they are serviced in the order: 4 then 5 then 0.

The round-robin arbitration mode generally provides a more fair allocation of the available slave-port bandwidth (compared to fixed priority) as the fixed master priority does not affect the master selection.

19.4 Initialization/application information

No initialization is required for the crossbar switch. See the AXBS section of the configuration chapter for the reset state of the arbitration scheme.

Chapter 20
Peripheral Bridge (AIPS-Lite)

20.1 Introduction

NOTE

For the chip-specific implementation details of this module's instances, see the chip configuration information.

The peripheral bridge converts the crossbar switch interface to an interface that can access most of the slave peripherals on this chip.

The peripheral bridge occupies 64 MB of the address space, which is divided into peripheral slots of 4 KB . (It might be possible that all the peripheral slots are not used. See Memory map for details on slot assignments.) The bridge includes separate clock enable inputs for each of the slots to accommodate slower peripherals.

20.1.1 Features

Key features of the peripheral bridge are:

- Supports peripheral slots with 8-, 16-, and 32-bit datapath width

20.1.2 General operation

The slave devices connected to the peripheral bridge are modules which contain a programming model of control and status registers. The system masters read and write these registers through the peripheral bridge. The peripheral bridge performs a bus protocol conversion of the master transactions and generates the following as inputs to the peripherals:

- Module enables
- Module addresses

- Transfer attributes
- Byte enables
- Write data

The peripheral bridge selects and captures read data from the peripheral interface and returns it to the crossbar switch.

The register maps of the peripherals are located on 4-KB boundaries. Each peripheral is allocated one or more 4-KB block(s) of the memory map.

The AIPS-Lite module uses the data width of accessed peripheral to perform proper data byte lane routing; bus decomposition (bus sizing) is performed when the access size is larger than the peripheral's data width.

20.2 Functional description

The peripheral bridge functions as a bus protocol translator between the crossbar switch and the slave peripheral bus.

The peripheral bridge manages all transactions destined for the attached slave devices and generates select signals for modules on the peripheral bus by decoding accesses within the attached address space.

20.2.1 Access support

All combinations of access size and peripheral data port width are supported. An access that is larger than the target peripheral's data width will be decomposed to multiple, smaller accesses. Bus decomposition is terminated by a transfer error caused by an access to an empty register area.

Chapter 21
Multipurpose Clock Generator (MCG)

21.1 Introduction

NOTE

For the chip-specific implementation details of this module's instances, see the chip configuration information.

The multipurpose clock generator (MCG) module provides several clock source choices for the MCU. The module contains a frequency-locked loop (FLL). The FLL is controllable by either an internal or an external reference clock. The module can select either of the FLL orthe internal or external reference clocks as a source for the MCU system clock. The MCG operates in conjuction with a crystal oscillator, which allows an external crystal, ceramic resonator, or another external clock source to produce the external reference clock.

21.1.1 Features

Key features of the MCG module are:

- Frequency-locked loop (FLL):
  - Digitally-controlled oscillator (DCO)
  - DCO frequency range is programmable for up to four different frequency ranges.
  - Option to program and maximize DCO output frequency for a low frequency external reference clock source.
  - Option to prevent FLL from resetting its current locked frequency when switching clock modes if FLL reference frequency is not changed.

  - Internal or external reference clock can be used as the FLL source.
  - Can be used as a clock source for other on-chip peripherals.
- Internal reference clock generator:
  - Slow clock with nine trim bits for accuracy
  - Fast clock with four trim bits
  - Can be used as source clock for the FLL. In FEI mode, only the slow Internal Reference Clock (IRC) can be used as the FLL source.
  - Either the slow or the fast clock can be selected as the clock source for the MCU.
  - Can be used as a clock source for other on-chip peripherals.
- Control signals for the MCG external reference low power oscillator clock generators are provided:
  - HGO, RANGE, EREFS
- External clock from the Crystal Oscillator :
  - Can be used as a source for the FLL.
  - Can be selected as the clock source for the MCU.
- External clock monitor with reset and interrupt request capability to check for external clock failure when running in FBE, BLPE, or FEE modes
- Internal Reference Clocks Auto Trim Machine (ATM) capability using an external clock as a reference
- Reference dividers for the FLL are provided
- Reference dividers for the Fast Internal Reference Clock are provided
- MCG FLL Clock (MCGFLLCLK) is provided as a clock source for other on-chip peripherals
- MCG Fixed Frequency Clock (MCGFFCLK) is provided as a clock source for other on-chip peripherals
- MCG Internal Reference Clock (MCGIRCLK) is provided as a clock source for other on-chip peripherals

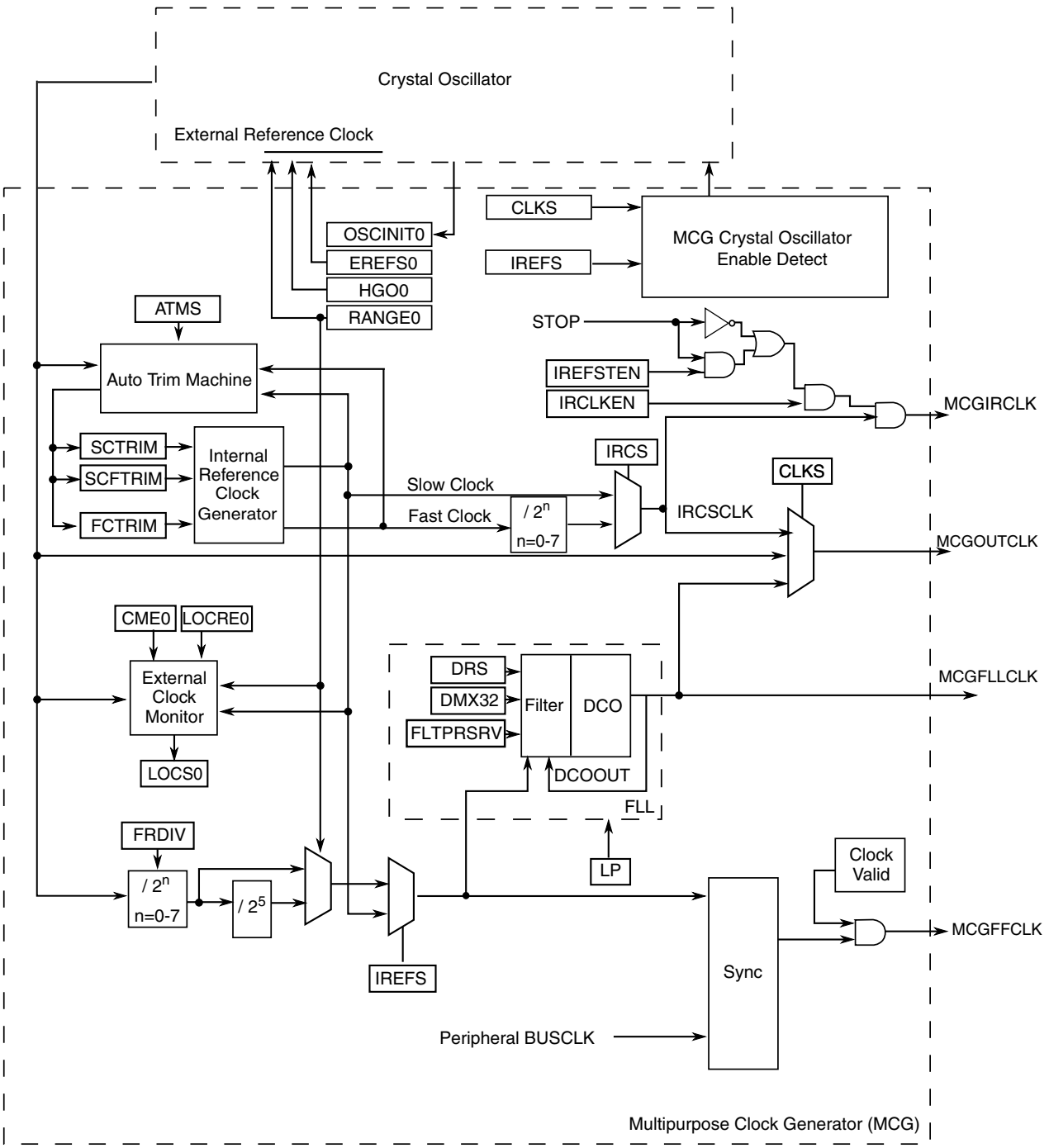

Figure 21-1. Multipurpose Clock Generator (MCG) block diagram

NOTE

Refer to the chip configuration chapter to identify the oscillator used in this MCU.

21.1.2 Modes of Operation

The MCG has the following modes of operation: FEI, FEE, FBI, FBE, BLPI, BLPE, and Stop. For details, see MCG modes of operation.

21.2 External Signal Description

There are no MCG signals that connect off chip.

21.3 Memory Map/Register Definition

This section includes the memory map and register definition.

The MCG registers can only be written when in supervisor mode. Write accesses when in user mode will result in a bus error. Read accesses may be performed in both supervisor and user mode.

MCG memory map

Absolute address (hex)	Register name	Width (in bits)	Access	Reset value	Section/ page
4006_4000	MCG Control 1 Register (MCG_C1)	8	R/W	04h	21.3.1/268
4006_4001	MCG Control 2 Register (MCG_C2)	8	R/W	80h	21.3.2/269
4006_4002	MCG Control 3 Register (MCG_C3)	8	R/W	Undefined	21.3.3/271
4006_4003	MCG Control 4 Register (MCG_C4)	8	R/W	Undefined	21.3.4/271
4006_4005	MCG Control 6 Register (MCG_C6)	8	R/W	00h	21.3.5/273
4006_4006	MCG Status Register (MCG_S)	8	R	10h	21.3.6/273
4006_4008	MCG Status and Control Register (MCG_SC)	8	R/W	02h	21.3.7/274
4006_400A	MCG Auto Trim Compare Value High Register (MCG_ATCVH)	8	R/W	00h	21.3.8/276
4006_400B	MCG Auto Trim Compare Value Low Register (MCG_ATCVL)	8	R/W	00h	21.3.9/276

21.3.1 MCG Control 1 Register (MCG_C1)

Address: 4006_4000h base + 0h offset = 4006_4000h

Bit	7	6	5	4	3	2	1	0
Read Write	CLKS		FRDIV			IREFS	IRCLKEN	IREFSTEN
Reset	0	0	0	0	0	1	0	0

MCG_C1 field descriptions

Field	Description
7–6 CLKS	Clock Source Select Selects the clock source for MCGOUTCLK . 00 Encoding 0 — Output of FLL is selected. 01 Encoding 1 — Internal reference clock is selected. 10 Encoding 2 — External reference clock is selected. 11 Encoding 3 — Reserved.
5–3 FRDIV	FLL External Reference Divider Selects the amount to divide down the external reference clock for the FLL. The resulting frequency must be in the range 31.25 kHz to 39.0625 kHz (This is required when FLL/DCO is the clock source for MCGOUTCLK . In FBE mode, it is not required to meet this range, but it is recommended in the cases when trying to enter a FLL mode from FBE). 000 If RANGE 0 = 0 , Divide Factor is 1; for all other RANGE 0 values, Divide Factor is 32. 001 If RANGE 0 = 0 , Divide Factor is 2; for all other RANGE 0 values, Divide Factor is 64. 010 If RANGE 0 = 0 , Divide Factor is 4; for all other RANGE 0 values, Divide Factor is 128. 011 If RANGE 0 = 0 , Divide Factor is 8; for all other RANGE 0 values, Divide Factor is 256. 100 If RANGE 0 = 0 , Divide Factor is 16; for all other RANGE 0 values, Divide Factor is 512. 101 If RANGE 0 = 0 , Divide Factor is 32; for all other RANGE 0 values, Divide Factor is 1024. 110 If RANGE 0 = 0 , Divide Factor is 64; for all other RANGE 0 values, Divide Factor is 1280 . 111 If RANGE 0 = 0 , Divide Factor is 128; for all other RANGE 0 values, Divide Factor is 1536 .
2 IREFS	Internal Reference Select Selects the reference clock source for the FLL. 0 External reference clock is selected. 1 The slow internal reference clock is selected.
1 IRCLKEN	Internal Reference Clock Enable Enables the internal reference clock for use as MCGIRCLK. 0 MCGIRCLK inactive. 1 MCGIRCLK active.
0 IREFSTEN	Internal Reference Stop Enable Controls whether or not the internal reference clock remains enabled when the MCG enters Stop mode. 0 Internal reference clock is disabled in Stop mode. 1 Internal reference clock is enabled in Stop mode if IRCLKEN is set or if MCG is in FEI, FBI, or BLPI modes before entering Stop mode.

21.3.2 MCG Control 2 Register (MCG_C2)

Address: 4006_4000h base + 1h offset = 4006_4001h

Bit	7	6	5	4	3	2	1	0
Read Write	LOCRE0	FCFTRIM	RANGE0		HGO0	EREFS0	LP	IRCS
Reset	1	0	0	0	0	0	0	0

MCG_C2 field descriptions

Field	Description
7 LOCRE0	Loss of Clock Reset Enable Determines whether an interrupt or a reset request is made following a loss of OSC0 external reference clock. The LOCRE0 only has an affect when CME0 is set. 0 Interrupt request is generated on a loss of OSC0 external reference clock. 1 Generate a reset request on a loss of OSC0 external reference clock.
6 FCFTRIM	Fast Internal Reference Clock Fine Trim FCFTRIM controls the smallest adjustment of the fast internal reference clock frequency. Setting FCFTRIM increases the period and clearing FCFTRIM decreases the period by the smallest amount possible. If an FCFTRIM value stored in nonvolatile memory is to be used, it is your responsibility to copy that value from the nonvolatile memory location to this bit.
5–4 RANGE0	Frequency Range Select Selects the frequency range for the crystal oscillator or external clock source. See the Oscillator (OSC) chapter for more details and the device data sheet for the frequency ranges used. 00 Encoding 0 — Low frequency range selected for the crystal oscillator . 01 Encoding 1 — High frequency range selected for the crystal oscillator . 1X Encoding 2 — Very high frequency range selected for the crystal oscillator .
3 HGO0	High Gain Oscillator Select Controls the crystal oscillator mode of operation. See the Oscillator (OSC) chapter for more details. 0 Configure crystal oscillator for low-power operation. 1 Configure crystal oscillator for high-gain operation.
2 EREFS0	External Reference Select Selects the source for the external reference clock. See the Oscillator (OSC) chapter for more details. 0 External reference clock requested. 1 Oscillator requested.
1 LP	Low Power Select Controls whether the FLL is disabled in BLPI and BLPE modes. In FBE mode, setting this bit to 1 will transition the MCG into BLPE mode; in FBI mode, setting this bit to 1 will transition the MCG into BLPI mode. In any other MCG mode, LP bit has no affect. 0 FLL is not disabled in bypass modes. 1 FLL is disabled in bypass modes (lower power)
0 IRCS	Internal Reference Clock Select Selects between the fast or slow internal reference clock source. 0 Slow internal reference clock selected. 1 Fast internal reference clock selected.

21.3.3 MCG Control 3 Register (MCG_C3)

Address: 4006_4000h base + 2h offset = 4006_4002h

Bit	7	6	5	4	3	2	1	0
Read Write	SCTRIM							
Reset	x*	x*	x*	x*	x*	x*	x*	x*

* Notes:
- x = Undefined at reset.

MCG_C3 field descriptions

Field	Description
SCTRIM	Slow Internal Reference Clock Trim Setting SCTRIM controls the slow internal reference clock frequency by controlling the slow internal reference clock period. The SCTRIM bits are binary weighted, that is, bit 1 adjusts twice as much as bit 0. Increasing the binary value increases the period, and decreasing the value decreases the period. An additional fine trim bit is available in C4 register as the SCFTRIM bit. Upon reset, this value is loaded with a factory trim value. If an SCTRIM value stored in nonvolatile memory is to be used, it is your responsibility to copy that value from the nonvolatile memory location to this register.

1. A value for SCTRIM is loaded during reset from a factory programmed location.

21.3.4 MCG Control 4 Register (MCG_C4)

NOTE

Reset values for DRST and DMX32 bits are 0.

Address: 4006_4000h base + 3h offset = 4006_4003h

Bit	7	6	5	4	3	2	1	0
Read Write	DMX32	DRST_DRS		FCTRIM				SCFTRIM
Reset	0	0	0	x*	x*	x*	x*	x*

* Notes:
- x = Undefined at reset.
- A value for FCTRIM is loaded during reset from a factory programmed location. x = Undefined at reset.

MCG_C4 field descriptions

Field	Description
7 DMX32	DCO Maximum Frequency with 32.768 kHz Reference The DMX32 bit controls whether the DCO frequency range is narrowed to its maximum frequency with a 32.768 kHz reference.

Table continues on the next page...

MCG_C4 field descriptions (continued)

<table>
<tr><th>Field</th><th>Description</th></tr>
<tr><td></td><td>The following table identifies settings for the DCO frequency range.

NOTE: The system clocks derived from this source should not exceed their specified maximums.
<table>
<tr><th>DRST_DRS</th><th>DMX32</th><th>Reference Range</th><th>FLL Factor</th><th>DCO Range</th></tr>
<tr><td rowspan="2">00</td><td>0</td><td>31.25–39.0625 kHz</td><td>640</td><td>20–25 MHz</td></tr>
<tr><td>1</td><td>32.768 kHz</td><td>732</td><td>24 MHz</td></tr>
<tr><td rowspan="2">01</td><td>0</td><td>31.25–39.0625 kHz</td><td>1280</td><td>40–50 MHz</td></tr>
<tr><td>1</td><td>32.768 kHz</td><td>1464</td><td>48 MHz</td></tr>
<tr><td rowspan="2">10</td><td>0</td><td>31.25–39.0625 kHz</td><td>1920</td><td>60–75 MHz</td></tr>
<tr><td>1</td><td>32.768 kHz</td><td>2197</td><td>72 MHz</td></tr>
<tr><td rowspan="2">11</td><td>0</td><td>31.25–39.0625 kHz</td><td>2560</td><td>80–100 MHz</td></tr>
<tr><td>1</td><td>32.768 kHz</td><td>2929</td><td>96 MHz</td></tr>
</table>
0 DCO has a default range of 25%.
1 DCO is fine-tuned for maximum frequency with 32.768 kHz reference.</td></tr>
<tr><td>6–5
DRST_DRS</td><td>DCO Range Select

The DRS bits select the frequency range for the FLL output, DCOOUT. When the LP bit is set, writes to the DRS bits are ignored. The DRST read field indicates the current frequency range for DCOOUT. The DRST field does not update immediately after a write to the DRS field due to internal synchronization between clock domains. See the DCO Frequency Range table for more details.

00 Encoding 0 — Low range (reset default).
01 Encoding 1 — Mid range.
10 Encoding 2 — Mid-high range.
11 Encoding 3 — High range.</td></tr>
<tr><td>4–1
FCTRIM</td><td>Fast Internal Reference Clock Trim Setting

FCTRIM controls the fast internal reference clock frequency by controlling the fast internal reference clock period. The FCTRIM bits are binary weighted, that is, bit 1 adjusts twice as much as bit 0. Increasing the binary value increases the period, and decreasing the value decreases the period.

If an FCTRIM[3:0] value stored in nonvolatile memory is to be used, it is your responsibility to copy that value from the nonvolatile memory location to this register.</td></tr>
<tr><td>0
SCFTRIM</td><td>Slow Internal Reference Clock Fine Trim

SCFTRIM controls the smallest adjustment of the slow internal reference clock frequency. Setting SCFTRIM increases the period and clearing SCFTRIM decreases the period by the smallest amount possible.

If an SCFTRIM value stored in nonvolatile memory is to be used, it is your responsibility to copy that value from the nonvolatile memory location to this bit.</td></tr>
</table>

1. A value for FCTRIM is loaded during reset from a factory programmed location.
2. A value for SCFTRIM is loaded during reset from a factory programmed location .

21.3.5 MCG Control 6 Register (MCG_C6)

Address: 4006_4000h base + 5h offset = 4006_4005h

Bit	7	6	5	4	3	2	1	0
Read	0		CME	0				
Write								
Reset	0	0	0	0	0	0	0	0

MCG_C6 field descriptions

Field	Description
7–6 Reserved	Reserved This field is reserved. This read-only field is reserved and always has the value 0.
5 CME	Clock Monitor Enable Determines if a reset request is made following a loss of external clock indication. The CME bit should only be set to a logic 1 when the MCG is in an operational mode that uses the external clock (FEE, FBE, or BLPE). Whenever the CME bit is set to a logic 1, the value of the RANGE bits in the C2 register should not be changed. CME bit should be set to a logic 0 before the MCG enters any Stop mode. Otherwise, a reset request may occur when in Stop mode. CME should also be set to a logic 0 before entering VLPR or VLPW power modes if the MCG is in BLPE mode. 0 External clock monitor is disabled. 1 Generate a reset request on loss of external clock.
Reserved	Reserved This field is reserved. This read-only field is reserved and always has the value 0.

21.3.6 MCG Status Register (MCG_S)

Address: 4006_4000h base + 6h offset = 4006_4006h

Bit	7	6	5	4	3	2	1	0
Read	0			IREFST	CLKST		OSCINIT0	IRCST
Write								
Reset	0	0	0	1	0	0	0	0

MCG_S field descriptions

Field	Description
7–5 Reserved	Reserved This field is reserved. This read-only field is reserved and always has the value 0.

Table continues on the next page...

MCG_S field descriptions (continued)

Field	Description
4 IREFST	Internal Reference Status This bit indicates the current source for the FLL reference clock. The IREFST bit does not update immediately after a write to the IREFS bit due to internal synchronization between clock domains. 0 Source of FLL reference clock is the external reference clock. 1 Source of FLL reference clock is the internal reference clock.
3–2 CLKST	Clock Mode Status These bits indicate the current clock mode. The CLKST bits do not update immediately after a write to the CLKS bits due to internal synchronization between clock domains. 00 Encoding 0 — Output of the FLL is selected (reset default). 01 Encoding 1 — Internal reference clock is selected. 10 Encoding 2 — External reference clock is selected. 11 Reserved.
1 OSCINIT0	OSC Initialization This bit, which resets to 0, is set to 1 after the initialization cycles of the crystal oscillator clock have completed. After being set, the bit is cleared to 0 if the OSC is subsequently disabled. See the OSC module's detailed description for more information.
0 IRCST	Internal Reference Clock Status The IRCST bit indicates the current source for the internal reference clock select clock (IRCSCLK). The IRCST bit does not update immediately after a write to the IRCS bit due to internal synchronization between clock domains. The IRCST bit will only be updated if the internal reference clock is enabled, either by the MCG being in a mode that uses the IRC or by setting the C1[IRCLKEN] bit . 0 Source of internal reference clock is the slow clock (32 kHz IRC). 1 Source of internal reference clock is the fast clock (4 MHz IRC).

21.3.7 MCG Status and Control Register (MCG_SC)

Address: 4006_4000h base + 8h offset = 4006_4008h

Bit	7	6	5	4	3	2	1	0
Read Write	ATME	ATMS	ATMF	FLTPRSRV	FCRDIV			LOCS0
Reset	0	0	0	0	0	0	1	0

MCG_SC field descriptions

Field	Description
7 ATME	Automatic Trim Machine Enable Enables the Auto Trim Machine to start automatically trimming the selected Internal Reference Clock. **NOTE:** ATME deasserts after the Auto Trim Machine has completed trimming all trim bits of the IRCS clock selected by the ATMS bit.

Table continues on the next page...

MCG_SC field descriptions (continued)

Field	Description
	Writing to C1, C3, C4, and SC registers or entering Stop mode aborts the auto trim operation and clears this bit. 0 Auto Trim Machine disabled. 1 Auto Trim Machine enabled.
6 ATMS	Automatic Trim Machine Select Selects the IRCS clock for Auto Trim Test. 0 32 kHz Internal Reference Clock selected. 1 4 MHz Internal Reference Clock selected.
5 ATMF	Automatic Trim Machine Fail Flag Fail flag for the Automatic Trim Machine (ATM). This bit asserts when the Automatic Trim Machine is enabled, ATME=1, and a write to the C1, C3, C4, and SC registers is detected or the MCG enters into any Stop mode. A write to ATMF clears the flag. 0 Automatic Trim Machine completed normally. 1 Automatic Trim Machine failed.
4 FLTPRSRV	FLL Filter Preserve Enable This bit will prevent the FLL filter values from resetting allowing the FLL output frequency to remain the same during clock mode changes where the FLL/DCO output is still valid. (Note: This requires that the FLL reference frequency to remain the same as what it was prior to the new clock mode switch. Otherwise FLL filter and frequency values will change.) 0 FLL filter and FLL frequency will reset on changes to currect clock mode. 1 Fll filter and FLL frequency retain their previous values during new clock mode change.
3–1 FCRDIV	Fast Clock Internal Reference Divider Selects the amount to divide down the fast internal reference clock. The resulting frequency will be in the range 31.25 kHz to 4 MHz (Note: Changing the divider when the Fast IRC is enabled is not supported). 000 Divide Factor is 1 001 Divide Factor is 2. 010 Divide Factor is 4. 011 Divide Factor is 8. 100 Divide Factor is 16 101 Divide Factor is 32 110 Divide Factor is 64 111 Divide Factor is 128.
0 LOCS0	OSC0 Loss of Clock Status The LOCS0 indicates when a loss of OSC0 reference clock has occurred. The LOCS0 bit only has an effect when CME0 is set. This bit is cleared by writing a logic 1 to it when set. 0 Loss of OSC0 has not occurred. 1 Loss of OSC0 has occurred.

21.3.8 MCG Auto Trim Compare Value High Register (MCG_ATCVH)

Address: 4006_4000h base + Ah offset = 4006_400Ah

Bit	7	6	5	4	3	2	1	0
Read Write	ATCVH							
Reset	0	0	0	0	0	0	0	0

MCG_ATCVH field descriptions

Field	Description
ATCVH	ATM Compare Value High Values are used by Auto Trim Machine to compare and adjust Internal Reference trim values during ATM SAR conversion.

21.3.9 MCG Auto Trim Compare Value Low Register (MCG_ATCVL)

Address: 4006_4000h base + Bh offset = 4006_400Bh

Bit	7	6	5	4	3	2	1	0
Read Write	ATCVL							
Reset	0	0	0	0	0	0	0	0

MCG_ATCVL field descriptions

Field	Description
ATCVL	ATM Compare Value Low Values are used by Auto Trim Machine to compare and adjust Internal Reference trim values during ATM SAR conversion.

21.4 Functional Description

21.4.1 MCG mode state diagram

The seven states of the MCG are shown in the following figure and are described in Table 21-11. The arrows indicate the permitted MCG mode transitions.

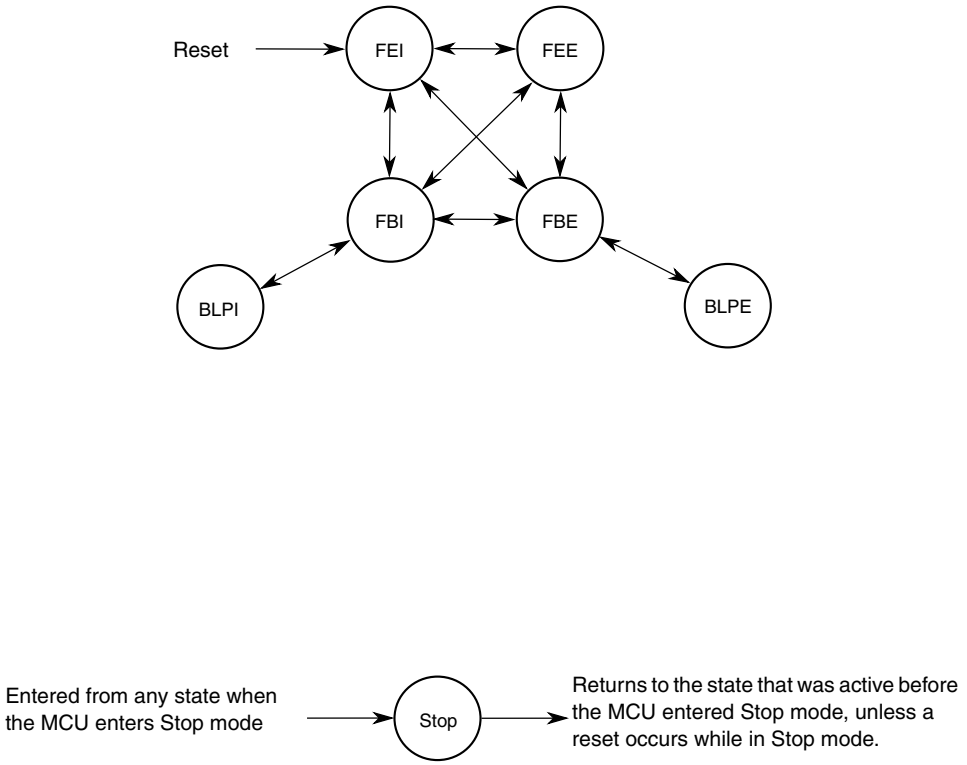

Figure 21-11. MCG mode state diagram

21.4.1.1 MCG modes of operation

The MCG operates in one of the following modes.

Note

The MCG restricts transitions between modes. For the permitted transitions, see Figure 21-11.

Table 21-11. MCG modes of operation

Mode	Description
FLL Engaged Internal (FEI)	FLL engaged internal (FEI) is the default mode of operation and is entered when all the following condtions occur: • 00 is written to C1[CLKS] • 1 is written to C1[IREFS] In FEI mode, MCGOUTCLK is derived from the FLL clock (DCOCLK) that is controlled by the 32 kHz Internal Reference Clock (IRC). The FLL loop will lock the DCO frequency to the FLL factor, as selected by C4[DRST_DRS] and C4[DMX32] bits, times the internal reference frequency. See the C4[DMX32] bit description for more details.
FLL Engaged External (FEE)	FLL engaged external (FEE) mode is entered when all the following conditions occur: • 00 is written to C1[CLKS]

Table continues on the next page...

Table 21-11. MCG modes of operation (continued)

Mode	Description
	• 0 is written to C1[IREFS] • C1[FRDIV] must be written to divide external reference clock to be within the range of 31.25 kHz to 39.0625 kHz In FEE mode, MCGOUTCLK is derived from the FLL clock (DCOCLK) that is controlled by the external reference clock. The FLL loop will lock the DCO frequency to the FLL factor, as selected by C4[DRST_DRS] and C4[DMX32] bits, times the external reference frequency, as specified by C1[FRDIV] and C2[RANGE]. See the C4[DMX32] bit description for more details.
FLL Bypassed Internal (FBI)	FLL bypassed internal (FBI) mode is entered when all the following conditions occur: • 01 is written to C1[CLKS] • 1 is written to C1[IREFS] • 0 is written to C2[LP] In FBI mode, the MCGOUTCLK is derived either from the slow (32 kHz IRC) or fast (4 MHz IRC) internal reference clock, as selected by the C2[IRCS] bit. The FLL is operational but its output is not used. This mode is useful to allow the FLL to acquire its target frequency while the MCGOUTCLK is driven from the C2[IRCS] selected internal reference clock. The FLL clock (DCOCLK) is controlled by the slow internal reference clock, and the DCO clock frequency locks to a multiplication factor, as selected by C4[DRST_DRS] and C4[DMX32] bits, times the internal reference frequency. See the C4[DMX32] bit description for more details.
FLL Bypassed External (FBE)	FLL bypassed external (FBE) mode is entered when all the following conditions occur: • 10 is written to C1[CLKS] • 0 is written to C1[IREFS] • C1[FRDIV] must be written to divide external reference clock to be within the range of 31.25 kHz to 39.0625 kHz. • 0 is written to C2[LP] In FBE mode, the MCGOUTCLK is derived from the external reference clock. The FLL is operational but its output is not used. This mode is useful to allow the FLL to acquire its target frequency while the MCGOUTCLK is driven from the external reference clock. The FLL clock (DCOCLK) is controlled by the external reference clock, and the DCO clock frequency locks to a multiplication factor, as selected by C4[DRST_DRS] and C4[DMX32] bits, times the divided external reference frequency. See the C4[DMX32] bit description for more details.
Bypassed Low Power Internal (BLPI)[1]	Bypassed Low Power Internal (BLPI) mode is entered when all the following conditions occur: • 01 is written to C1[CLKS] • 1 is written to C1[IREFS] • 1 is written to C2[LP] In BLPI mode, MCGOUTCLK is derived from the internal reference clock. The FLL is disabled
Bypassed Low Power External (BLPE)	Bypassed Low Power External (BLPE) mode is entered when all the following conditions occur: • 10 is written to C1[CLKS] • 0 is written to C1[IREFS] • 1 is written to C2[LP] In BLPE mode, MCGOUTCLK is derived from the external reference clock. The FLL is disabled

Table continues on the next page...

Table 21-11. MCG modes of operation (continued)

Mode	Description
Stop	Entered whenever the MCU enters a Stop state. The power modes are chip specific. For power mode assignments, see the chapter that describes how modules are configured and MCG behavior during Stop recovery. Entering Stop mode, the FLL is disabled, and all MCG clock signals are static except in the following case: MCGIRCLK is active in Normal Stop mode when all the following conditions become true: • C1[IRCLKEN] = 1 • C1[IREFSTEN] = 1

1. If entering VLPR mode, MCG has to be configured and enter BLPE mode or BLPI mode with the Fast IRC clock selected (C2[IRCS]=1). After it enters VLPR mode, writes to any of the MCG control registers that can cause an MCG clock mode switch to a non low power clock mode must be avoided.

NOTE

For the chip-specific modes of operation, see the power management chapter of this MCU.

21.4.1.2 MCG mode switching

The C1[IREFS] bit can be changed at any time, but the actual switch to the newly selected reference clocks is shown by the S[IREFST] bit. When switching between engaged internal and engaged external modes, the FLL will begin locking again after the switch is completed.

The C1[CLKS] bits can also be changed at any time, but the actual switch to the newly selected clock is shown by the S[CLKST] bits. If the newly selected clock is not available, the previous clock will remain selected.

The C4[DRST_DRS] write bits can be changed at any time except when C2[LP] bit is 1. If the C4[DRST_DRS] write bits are changed while in FLL engaged internal (FEI) or FLL engaged external (FEE), the MCGOUTCLK will switch to the new selected DCO range within three clocks of the selected DCO clock. After switching to the new DCO, the FLL remains unlocked for several reference cycles. DCO startup time is equal to the FLL acquisition time. After the selected DCO startup time is over, the FLL is locked. The completion of the switch is shown by the C4[DRST_DRS] read bits.

21.4.2 Low Power Bit Usage

The C2[LP] bit is provided to allow the FLL to be disabled and thus conserve power when these systems are not being used. The C4[DRST_DRS] can not be written while C2[LP] bit is 1. However, in some applications, it may be desirable to enable the FLL and allow it to lock for maximum accuracy before switching to an engaged mode. Do this by writing C2[LP] to 0.

21.4.3 MCG Internal Reference Clocks

This module supports two internal reference clocks with nominal frequencies of 32 kHz (slow IRC) and 4 MHz (fast IRC). The fast IRC frequency can be divided down by programming of the FCRDIV to produce a frequency range of 32 kHz to 4 MHz.

21.4.3.1 MCG Internal Reference Clock

The MCG Internal Reference Clock (MCGIRCLK) provides a clock source for other on-chip peripherals and is enabled when C1[IRCLKEN]=1. When enabled, MCGIRCLK is driven by either the fast internal reference clock (4 MHz IRC which can be divided down by the FRDIV factors) or the slow internal reference clock (32 kHz IRC). The IRCS clock frequency can be re-targeted by trimming the period of its IRCS selected internal reference clock. This can be done by writing a new trim value to the C3[SCTRIM]:C4[SCFTRIM] bits when the slow IRC clock is selected or by writing a new trim value to the C4[FCTRIM]:C2[FCFTRIM] bits when the fast IRC clock is selected. The internal reference clock period is proportional to the trim value written. C3[SCTRIM]:C4[SCFTRIM] (if C2[IRCS]=0) and C4[FCTRIM]:C2[FCFTRIM] (if C2[IRCS]=1) bits affect the MCGOUTCLK frequency if the MCG is in FBI or BLPI modes. C3[SCTRIM]:C4[SCFTRIM] (if C2[IRCS]=0) bits also affect the MCGOUTCLK frequency if the MCG is in FEI mode.

Additionally, this clock can be enabled in Stop mode by setting C1[IRCLKEN] and C1[IREFSTEN], otherwise this clock is disabled in Stop mode.

21.4.4 External Reference Clock

The MCG module can support an external reference clock in all modes. See the device datasheet for external reference frequency range. When C1[IREFS] is set, the external reference clock will not be used by the FLL. In these mode, the frequency can be equal to the maximum frequency the chip-level timing specifications will support.

If any of the CME bits are asserted the slow internal reference clock is enabled along with the enabled external clock monitor. For the case when C6[CME0]=1, a loss of clock is detected if the OSC0 external reference falls below a minimum frequency (f_{loc_high} or f_{loc_low} depending on C2[RANGE0]).

NOTE

All clock monitors must be disabled before entering these low-power modes: Stop, VLPS, VLPR, VLPW, and VLLSx.

Upon detect of a loss of clock event, the MCU generates a system reset if the respective LOCRE bit is set. Otherwise the MCG sets the respective LOCS bit and the MCG generates a LOCS interrupt request.

21.4.5 MCG Fixed frequency clock

The MCG Fixed Frequency Clock (MCGFFCLK) provides a fixed frequency clock source for other on-chip peripherals; see the block diagram. This clock is driven by either the slow clock from the internal reference clock generator or the external reference clock from the Crystal Oscillator, divided by the FLL reference clock divider. The source of MCGFFCLK is selected by C1[IREFS].

This clock is synchronized to the peripheral bus clock and is valid only when its frequency is not more than 1/8 of the MCGOUTCLK frequency. When it is not valid, it is disabled and held high. The MCGFFCLK is not available when the MCG is in BLPI mode. This clock is also disabled in Stop mode. The FLL reference clock must be set within the valid frequency range for the MCGFFCLK.

21.4.6 MCG Auto TRIM (ATM)

The MCG Auto Trim (ATM) is a MCG feature that when enabled, it configures the MCG hardware to automatically trim the MCG Internal Reference Clocks using an external clock as a reference. The selection between which MCG IRC clock gets tested and

enabled is controlled by the ATC[ATMS] control bit (ATC[ATMS]=0 selects the 32 kHz IRC and ATC[ATMS]=1 selects the 4 MHz IRC). If 4 MHz IRC is selected for the ATM, a divide by 128 is enabled to divide down the 4 MHz IRC to a range of 31.250 kHz.

When MCG ATM is enabled by writing ATC[ATME] bit to 1, The ATM machine will start auto trimming the selected IRC clock. During the autotrim process, ATC[ATME] will remain asserted and will deassert after ATM is completed or an abort occurs. The MCG ATM is aborted if a write to any of the following control registers is detected : C1, C3, C4, or ATC or if Stop mode is entered. If an abort occurs, ATC[ATMF] fail flag is asserted.

The ATM machine uses the bus clock as the external reference clock to perform the IRC auto-trim. Therefore, it is required that the MCG is configured in a clock mode where the reference clock used to generate the system clock is the external reference clock such as FBE clock mode. The MCG must not be configured in a clock mode where selected IRC ATM clock is used to generate the system clock. The bus clock is also required to be running with in the range of 8–16 MHz.

To perform the ATM on the selected IRC, the ATM machine uses the successive approximation technique to adjust the IRC trim bits to generate the desired IRC trimmed frequency. The ATM SARs each of the ATM IRC trim bits starting with the MSB. For each trim bit test, the ATM uses a pulse that is generated by the ATM selected IRC clock to enable a counter that counts number of ATM external clocks. At end of each trim bit, the ATM external counter value is compared to the ATCV[15:0] register value. Based on the comparison result, the ATM trim bit under test will get cleared or stay asserted. This is done until all trim bits have been tested by ATM SAR machine.

Before the ATM can be enabled, the ATM expected count needs to be derived and stored into the ATCV register. The ATCV expected count is derived based on the required target Internal Reference Clock (IRC) frequency, and the frequency of the external reference clock using the following formula:

$$\text{ATCV Expected Count Value} = 21*(Fe/Fr)$$

- Fr = Target Internal Reference Clock (IRC) Trimmed Frequency
- Fe = External Clock Frequency

If the auto trim is being performed on the 4 MHz IRC, the calculated expected count value must be multiplied by 128 before storing it in the ATCV register. Therefore, the ATCV Expected Count Value for trimming the 4 MHz IRC is calculated using the following formula.

$$\text{Expected Count Value} = (Fe/Fr)*21*(128)$$

21.5 Initialization / Application information

This section describes how to initialize and configure the MCG module in an application. The following sections include examples on how to initialize the MCG and properly switch between the various available modes.

21.5.1 MCG module initialization sequence

The MCG comes out of reset configured for FEI mode. The internal reference will stabilize in $t_{irefsts}$ microseconds before the FLL can acquire lock. As soon as the internal reference is stable, the FLL will acquire lock in $t_{fll_acquire}$ milliseconds.

21.5.1.1 Initializing the MCG

Because the MCG comes out of reset in FEI mode, the only MCG modes that can be directly switched to upon reset are FEE, FBE, and FBI modes (see Figure 21-11). Reaching any of the other modes requires first configuring the MCG for one of these three intermediate modes. Care must be taken to check relevant status bits in the MCG status register reflecting all configuration changes within each mode.

To change from FEI mode to FEE or FBE modes, follow this procedure:

1. Enable the external clock source by setting the appropriate bits in C2 register.
2. Write to C1 register to select the clock mode.
    - If entering FEE mode, set C1[FRDIV] appropriately, clear the C1[IREFS] bit to switch to the external reference, and leave the C1[CLKS] bits at 2'b00 so that the output of the FLL is selected as the system clock source.
    - If entering FBE, clear the C1[IREFS] bit to switch to the external reference and change the C1[CLKS] bits to 2'b10 so that the external reference clock is selected as the system clock source. The C1[FRDIV] bits should also be set

appropriately here according to the external reference frequency to keep the FLL reference clock in the range of 31.25 kHz to 39.0625 kHz. Although the FLL is bypassed, it is still on in FBE mode.

- The internal reference can optionally be kept running by setting the C1[IRCLKEN] bit. This is useful if the application will switch back and forth between internal and external modes. For minimum power consumption, leave the internal reference disabled while in an external clock mode.

3. Once the proper configuration bits have been set, wait for the affected bits in the MCG status register to be changed appropriately, reflecting that the MCG has moved into the proper mode.
   - If the MCG is in FEE, FBE, or BLPE mode, and C2[EREFS0] was also set in step 1, wait here for S[OSCINIT0] bit to become set indicating that the external clock source has finished its initialization cycles and stabilized.
   - If in FEE mode, check to make sure the S[IREFST] bit is cleared before moving on.
   - If in FBE mode, check to make sure the S[IREFST] bit is cleared and S[CLKST] bits have changed to 2'b10 indicating the external reference clock has been appropriately selected. Although the FLL is bypassed, it is still on in FBE mode.
4. Write to the C4 register to determine the DCO output (MCGFLLCLK) frequency range.
   - By default, with C4[DMX32] cleared to 0, the FLL multiplier for the DCO output is 640. For greater flexibility, if a mid-low-range FLL multiplier of 1280 is desired instead, set C4[DRST_DRS] bits to 2'b01 for a DCO output frequency of 40 MHz. If a mid high-range FLL multiplier of 1920 is desired instead, set the C4[DRST_DRS] bits to 2'b10 for a DCO output frequency of 60 MHz. If a high-range FLL multiplier of 2560 is desired instead, set the C4[DRST_DRS] bits to 2'b11 for a DCO output frequency of 80 MHz.
   - When using a 32.768 kHz external reference, if the maximum low-range DCO frequency that can be achieved with a 32.768 kHz reference is desired, set C4[DRST_DRS] bits to 2'b00 and set C4[DMX32] bit to 1. The resulting DCO output (MCGOUTCLK) frequency with the new multiplier of 732 will be 24 MHz.

- When using a 32.768 kHz external reference, if the maximum mid-range DCO frequency that can be achieved with a 32.768 kHz reference is desired, set C4[DRST_DRS] bits to 2'b01 and set C4[DMX32] bit to 1. The resulting DCO output (MCGOUTCLK) frequency with the new multiplier of 1464 will be 48 MHz.
- When using a 32.768 kHz external reference, if the maximum mid high-range DCO frequency that can be achieved with a 32.768 kHz reference is desired, set C4[DRST_DRS] bits to 2'b10 and set C4[DMX32] bit to 1. The resulting DCO output (MCGOUTCLK) frequency with the new multiplier of 2197 will be 72 MHz.
- When using a 32.768 kHz external reference, if the maximum high-range DCO frequency that can be achieved with a 32.768 kHz reference is desired, set C4[DRST_DRS] bits to 2'b11 and set C4[DMX32] bit to 1. The resulting DCO output (MCGOUTCLK) frequency with the new multiplier of 2929 will be 96 MHz.

5. Wait for the FLL lock time to guarantee FLL is running at new C4[DRST_DRS] and C4[DMX32] programmed frequency.

To change from FEI clock mode to FBI clock mode, follow this procedure:

1. Change C1[CLKS] bits in C1 register to 2'b01 so that the internal reference clock is selected as the system clock source.
2. Wait for S[CLKST] bits in the MCG status register to change to 2'b01, indicating that the internal reference clock has been appropriately selected.
3. Write to the C2 register to determine the IRCS output (IRCSCLK) frequency range.
   - By default, with C2[IRCS] cleared to 0, the IRCS selected output clock is the slow internal reference clock (32 kHz IRC). If the faster IRC is desired, set C2[IRCS] bit to 1 for a IRCS clock derived from the 4 MHz IRC source.

21.5.2 Using a 32.768 kHz reference

In FEE and FBE modes, if using a 32.768 kHz external reference, at the default FLL multiplication factor of 640, the DCO output (MCGFLLCLK) frequency is 20.97 MHz at low-range. If C4[DRST_DRS] bits are set to 2'b01, the multiplication factor is doubled to 1280, and the resulting DCO output frequency is 41.94 MHz at mid-low-range. If C4[DRST_DRS] bits are set to 2'b10, the multiplication factor is set to 1920, and the

resulting DCO output frequency is 62.91 MHz at mid high-range. If C4[DRST_DRS] bits are set to 2'b11, the multiplication factor is set to 2560, and the resulting DCO output frequency is 83.89 MHz at high-range.

In FBI and FEI modes, setting C4[DMX32] bit is not recommended. If the internal reference is trimmed to a frequency above 32.768 kHz, the greater FLL multiplication factor could potentially push the microcontroller system clock out of specification and damage the part.

21.5.3 MCG mode switching

When switching between operational modes of the MCG, certain configuration bits must be changed in order to properly move from one mode to another. Each time any of these bits are changed (C1[IREFS], C1[CLKS], C2[IRCS], or C2[EREFS0]), the corresponding bits in the MCG status register (IREFST, CLKST, IRCST, or OSCINIT) must be checked before moving on in the application software.

Additionally, care must be taken to ensure that the reference clock divider (C1[FRDIV]) is set properly for the mode being switched to. For instance, in FEE mode, if using a 4MHz crystal, C1[FRDIV] must be set to 3'b010 (divide-by-128) to devide the external frequency down to the required frequency between 31.25 and 39.0625 kHz.

In FBE, FEE, FBI, and FEI modes, at any time, the application can switch the FLL multiplication factor between 640, 1280, 1920, and 2560 with C4[DRST_DRS] bits. Writes to C4[DRST_DRS] bits will be ignored if C2[LP]=1.

The table below shows MCGOUTCLK frequency calculations using C1[FRDIV]settings for each clock mode.

Table 21-12. MCGOUTCLK Frequency Calculation Options

Clock Mode	$f_{MCGOUTCLK}$[1]	Note
FEI (FLL engaged internal)	(f_{int} * F)	Typical $f_{MCGOUTCLK}$ = 21 MHz immediately after reset.
FEE (FLL engaged external)	(f_{ext} / FLL_R) *F	f_{ext} / FLL_R must be in the range of 31.25 kHz to 39.0625 kHz
FBE (FLL bypassed external)	OSCCLK	OSCCLK / FLL_R must be in the range of 31.25 kHz to 39.0625 kHz
FBI (FLL bypassed internal)	MCGIRCLK	Selectable between slow and fast IRC
BLPI (Bypassed low power internal)	MCGIRCLK	Selectable between slow and fast IRC
BLPE (Bypassed low power external)	OSCCLK	

1. FLL_R is the reference divider selected by the C1[FRDIV] bits, F is the FLL factor selected by C4[DRST_DRS] and C4[DMX32] bits.

Chapter 22
Oscillator (OSC)

22.1 Introduction

NOTE

For the chip-specific implementation details of this module's instances, see the chip configuration information.

The OSC module is a crystal oscillator. The module, in conjunction with an external crystal or resonator, generates a reference clock for the MCU.

22.2 Features and Modes

Key features of the module are:

- Supports 32 kHz crystals (Low Range mode)
- Voltage and frequency filtering to guarantee clock frequency and stability
- Optionally external input bypass clock from EXTAL signal directly
- One clock for MCU clock system
- Two clocks for on-chip peripherals that can work in Stop modes

Functional Description describes the module's operation in more detail.

22.3 Block Diagram

The OSC module uses a crystal or resonator to generate three filtered oscillator clock signals. Three clocks are output from OSC module: OSCCLK for MCU system, OSCERCLK for on-chip peripherals, and OSC32KCLK. The OSCCLK can only work in run mode. OSCERCLK and OSC32KCLK can work in low power modes. For the clock source assignments, refer to the clock distribution information of this MCU.

Refer to the chip configuration chapter for the external reference clock source in this MCU.

The following figure shows the block diagram of the OSC module.

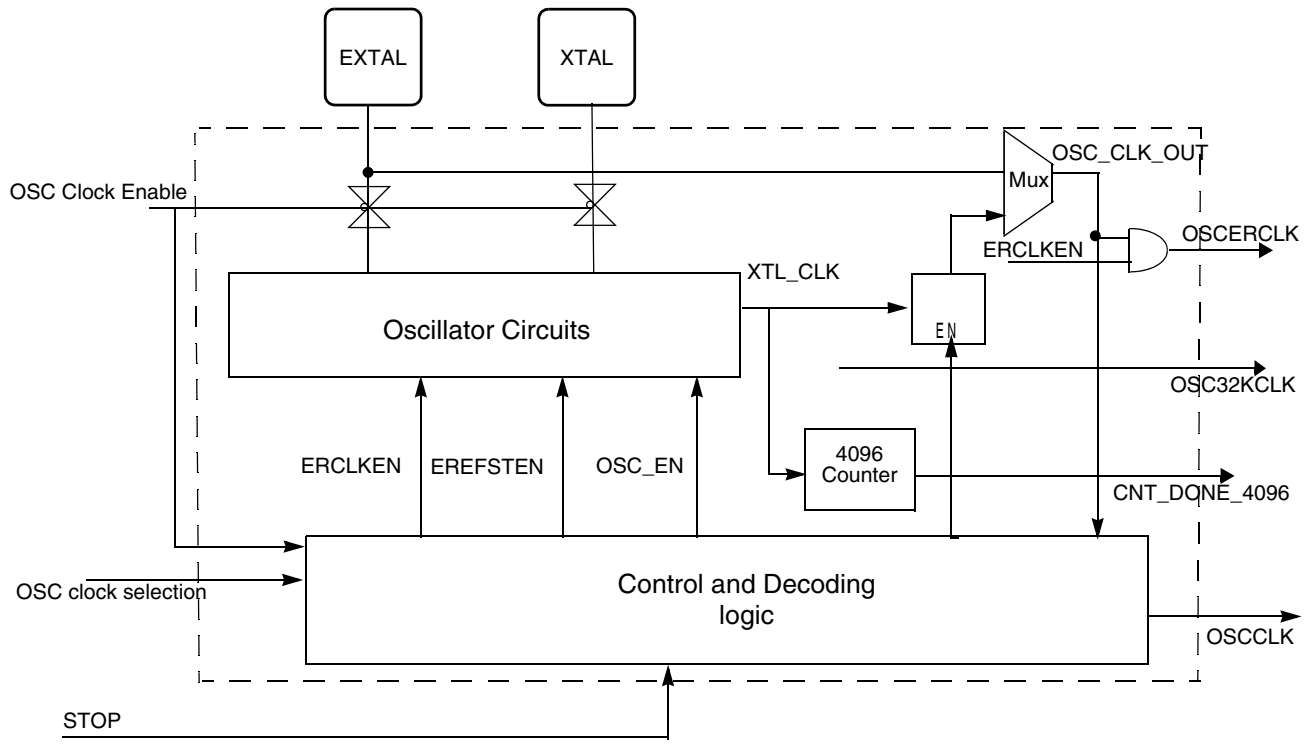

Figure 22-1. OSC Module Block Diagram

22.4 OSC Signal Descriptions

The following table shows the user-accessible signals available for the OSC module. Refer to signal multiplexing information for this MCU for more details.

Table 22-1. OSC Signal Descriptions

Signal	Description	I/O
EXTAL	External clock/Oscillator input	I
XTAL	Oscillator output	O

22.5 External Crystal / Resonator Connections

The connections for a crystal/resonator frequency reference are shown in the following figures. When using low-frequency, low-power mode, the only external component is the crystal or ceramic resonator itself. In the other oscillator modes, load capacitors (C_x, C_y) and feedback resistor (R_F) are required. The following table shows all possible connections.

Table 22-2. External Caystal/Resonator Connections

Oscillator Mode	Connections
Low-frequency (32 kHz), low-power	Connection 1

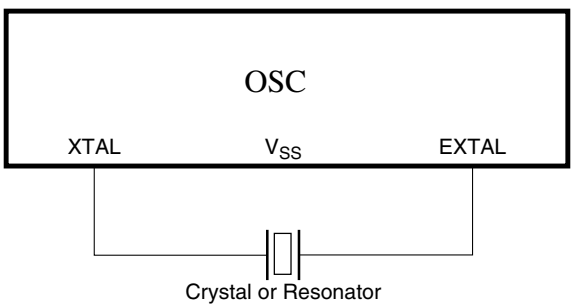

Figure 22-2. Crystal/Ceramic Resonator Connections - Connection 1

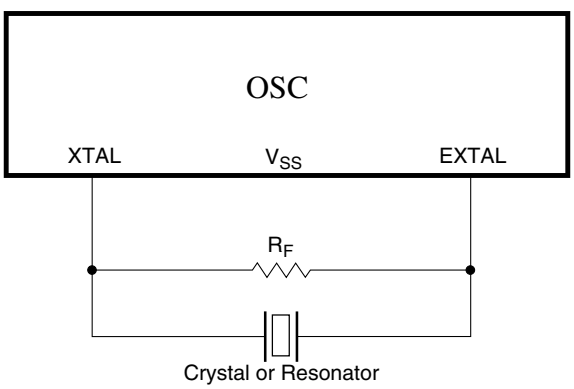

Figure 22-3. Crystal/Ceramic Resonator Connections - Connection 2

NOTE

Connection 1 and Connection 2 should use internal capacitors as the load of the oscillator by configuring the CR[SCxP] bits.

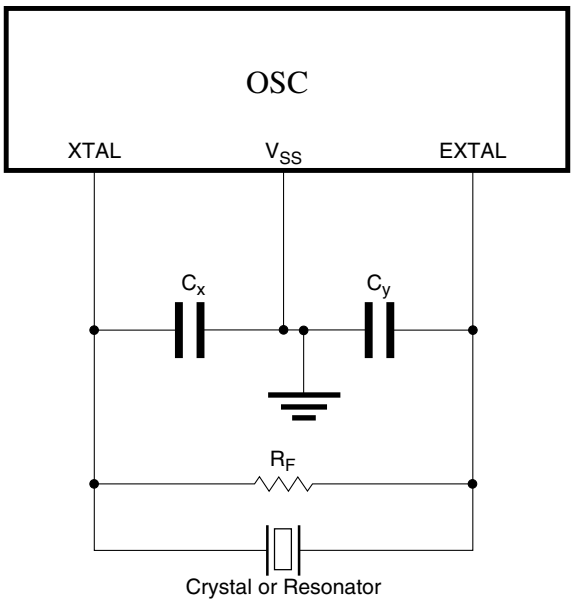

Figure 22-4. Crystal/Ceramic Resonator Connections - Connection 3

22.6 External Clock Connections

In external clock mode, the pins can be connected as shown below.

NOTE

XTAL can be used as a GPIO when the GPIO alternate function is configured for it.

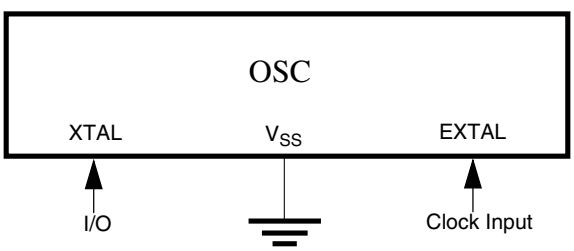

Figure 22-5. External Clock Connections

22.7 Memory Map/Register Definitions

Some oscillator module register bits are typically incorporated into other peripherals such as MCG or SIM.

22.7.1 OSC Memory Map/Register Definition

OSC memory map

Absolute address (hex)	Register name	Width (in bits)	Access	Reset value	Section/ page
4006_5000	OSC Control Register (OSC0_CR)	8	R/W	00h	22.7.1.1/ 293

22.7.1.1 OSC Control Register (OSCx_CR)

NOTE

After OSC is enabled and starts generating the clocks, the configurations such as low power and frequency range, must not be changed.

Address: 4006_5000h base + 0h offset = 4006_5000h

Bit	7	6	5	4	3	2	1	0
Read Write	ERCLKEN	0	EREFSTEN	0	SC2P	SC4P	SC8P	SC16P
Reset	0	0	0	0	0	0	0	0

OSCx_CR field descriptions

Field	Description
7 ERCLKEN	External Reference Enable Enables external reference clock (OSCERCLK). 0 External reference clock is inactive. 1 External reference clock is enabled.
6 Reserved	This field is reserved. This read-only field is reserved and always has the value 0.
5 EREFSTEN	External Reference Stop Enable

Table continues on the next page...

OSCx_CR field descriptions (continued)

Field	Description
	Controls whether or not the external reference clock (OSCERCLK) remains enabled when MCU enters Stop mode. 0 External reference clock is disabled in Stop mode. 1 External reference clock stays enabled in Stop mode if ERCLKEN is set before entering Stop mode.
4 Reserved	This field is reserved. This read-only field is reserved and always has the value 0.
3 SC2P	Oscillator 2 pF Capacitor Load Configure Configures the oscillator load. 0 Disable the selection. 1 Add 2 pF capacitor to the oscillator load.
2 SC4P	Oscillator 4 pF Capacitor Load Configure Configures the oscillator load. 0 Disable the selection. 1 Add 4 pF capacitor to the oscillator load.
1 SC8P	Oscillator 8 pF Capacitor Load Configure Configures the oscillator load. 0 Disable the selection. 1 Add 8 pF capacitor to the oscillator load.
0 SC16P	Oscillator 16 pF Capacitor Load Configure Configures the oscillator load. 0 Disable the selection. 1 Add 16 pF capacitor to the oscillator load.

22.8 Functional Description

This following sections provide functional details of the module.

22.8.1 OSC Module States

The states of the OSC module are shown in the following figure. The states and their transitions between each other are described in this section.

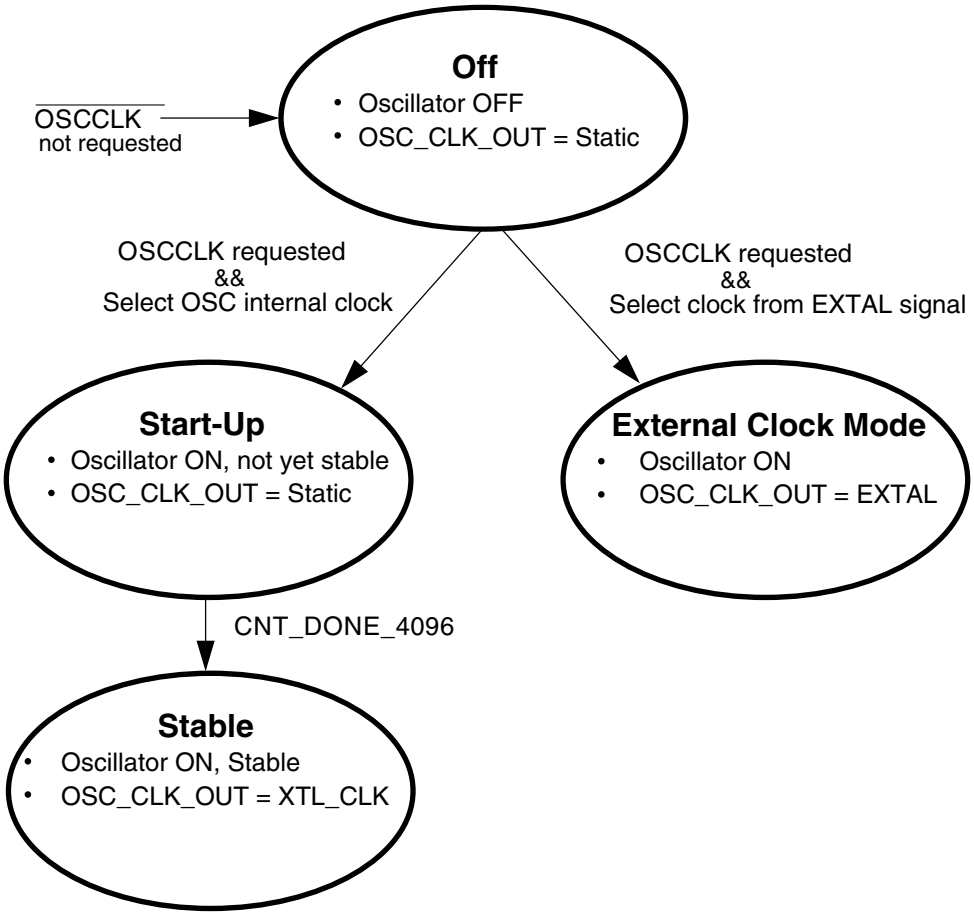

Figure 22-8. OSC Module State Diagram

NOTE

XTL_CLK is the clock generated internally from OSC circuits.

22.8.1.1 Off

The OSC enters the Off state when the system does not require OSC clocks. Upon entering this state, XTL_CLK is static unless OSC is configured to select the clock from the EXTAL pad by clearing the external reference clock selection bit. For details regarding the external reference clock source in this MCU, refer to the chip configuration chapter. The EXTAL and XTAL pins are also decoupled from all other oscillator circuitry in this state. The OSC module circuitry is configured to draw minimal current.

22.8.1.2 Oscillator Start-Up

The OSC enters start-up state when it is configured to generate clocks (internally the OSC_EN transitions high) using the internal oscillator circuits by setting the external reference clock selection bit. In this state, the OSC module is enabled and oscillations are starting up, but have not yet stabilized. When the oscillation amplitude becomes large enough to pass through the input buffer, XTL_CLK begins clocking the counter. When the counter reaches 4096 cycles of XTL_CLK, the oscillator is considered stable and XTL_CLK is passed to the output clock OSC_CLK_OUT.

22.8.1.3 Oscillator Stable

The OSC enters stable state when it is configured to generate clocks (internally the OSC_EN transitions high) using the internal oscillator circuits by setting the external reference clock selection bit and the counter reaches 4096 cycles of XTL_CLK (when CNT_DONE_4096 is high). In this state, the OSC module is producing a stable output clock on OSC_CLK_OUT. Its frequency is determined by the external components being used.

22.8.1.4 External Clock Mode

The OSC enters external clock state when it is enabled and external reference clock selection bit is cleared. For details regarding external reference clock source in this MCU, refer to the chip configuration chapter. In this state, the OSC module is set to buffer (with hysteresis) a clock from EXTAL onto the OSC_CLK_OUT. Its frequency is determined by the external clock being supplied.

22.8.2 OSC Module Modes

The OSC is a Pierce-type oscillator that supports external crystals or resonators operating over the frequency ranges shown in Table 22-7. These modes assume the following conditions: OSC is enabled to generate clocks (OSC_EN=1), configured to generate clocks internally (MCG_C2[EREFS] = 1), and some or one of the other peripherals (MCG, Timer, and so on) is configured to use the oscillator output clock (OSC_CLK_OUT).

Table 22-7. Oscillator Modes

Mode	Frequency Range
Low-frequency, low-power (VLP)	f_{osc_lo} (1 kHz) up to f_{osc_lo} (32.768 kHz)

NOTE

For information about low power modes of operation used in this chip and their alignment with some OSC modes, refer to the chip's Power Management details.

22.8.2.1 Low-Frequency, Low-Power Mode

In low-frequency, low-power mode, the oscillator uses a gain control loop to minimize power consumption. As the oscillation amplitude increases, the amplifier current is reduced. This continues until a desired amplitude is achieved at steady-state. This mode provides low pass frequency filtering as well as hysteresis for voltage filtering and converts the output to logic levels. In this mode, the internal capacitors could be used, the internal feedback resistor is connected, and no external resistor should be used.

In this mode, the amplifier inputs, gain-control input, and input buffer input are all capacitively coupled for leakage tolerance (not sensitive to the DC level of EXTAL).

Also in this mode, all external components except for the resonator itself are integrated, which includes the load capacitors and feeback resistor that biases EXTAL.

22.8.3 Counter

The oscillator output clock (OSC_CLK_OUT) is gated off until the counter has detected 4096 cycles of its input clock (XTL_CLK). After 4096 cycles are completed, the counter passes XTL_CLK onto OSC_CLK_OUT. This counting time-out is used to guarantee output clock stability.

22.8.4 Reference Clock Pin Requirements

The OSC module requires use of both the EXTAL and XTAL pins to generate an output clock in Oscillator mode, but requires only the EXTAL pin in External clock mode. The EXTAL and XTAL pins are available for I/O. For the implementation of these pins on this device, refer to the Signal Multiplexing chapter.

22.9 Reset

There is no reset state associated with the OSC module. The counter logic is reset when the OSC is not configured to generate clocks.

There are no sources of reset requests for the OSC module.

22.10 Low Power Modes Operation

When the MCU enters Stop modes, the OSC is functional depending on ERCLKEN and EREFSETN bit settings. If both these bits are set, the OSC is in operation. After waking up from Very Low Leakage Stop (VLLSx) modes, all OSC register bits are reset and initialization is required through software.

22.11 Interrupts

The OSC module does not generate any interrupts.

Chapter 23
Flash Memory Controller (FMC)

23.1 Introduction

The Flash Memory Controller (FMC) is a memory acceleration unit that provides:

- an interface between bus masters and the 32-bit program flash memory.
- a buffer and a cache that can accelerate program flash memory data transfers.

23.1.1 Overview

The Flash Memory Controller manages the interface between bus masters and the 32-bit program flash memory. The FMC receives status information detailing the configuration of the flash memory and uses this information to ensure a proper interface. The FMC supports 8-bit, 16-bit, and 32-bit read operations from the program flash memory. A write operation to program flash memory results in a bus error.

In addition, the FMC provides two separate mechanisms for accelerating the interface between bus masters and program flash memory. A 32-bit speculation buffer can prefetch the next 32-bit flash memory location, and a 4-way, 2-set program flash memory cache can store previously accessed program flash memory data for quick access times.

23.1.2 Features

The features of FMC module include:

- Interface between bus masters and the 32-bit program flash memory:
    - 8-bit, 16-bit, and 32-bit read operations to nonvolatile flash memory.
- Acceleration of data transfer from the program flash memory to the device:

- 32-bit prefetch speculation buffer for program flash accesses with controls for instruction/data access
- 4-way, 2-set, 32-bit line size program flash memory cache for a total of eight 32-bit entries with invalidation control

23.2 Modes of operation

The FMC operates only when a bus master accesses the program flash memory. In terms of chip power modes:

- The FMC operates only in Run and Wait modes, including VLPR and VLPW modes.
- For any power mode where the program flash memory cannot be accessed, the FMC is disabled.

23.3 External signal description

The FMC has no external (off-chip) signals.

23.4 Memory map and register descriptions

The MCM's programming model provides control and configuration of the FMC's features. For details, see the description of the MCM's Platform Control Register (PLACR).

23.5 Functional description

The FMC is a flash acceleration unit with flexible buffers for user configuration. Besides managing the interface between bus masters and the program flash memory, the FMC can be used to customize the program flash memory cache and buffer to provide single-cycle system clock data access times. Whenever a hit occurs for the prefetch speculation buffer or the cache (when enabled), the requested data is transferred within a single system clock.

Upon system reset, the FMC is configured as follows:

- Flash cache is enabled.
- Instruction speculation and caching are enabled.

- Data speculation is disabled.
- Data caching is enabled.

Though the default configuration provides flash acceleration, advanced users may desire to customize the FMC buffer configurations to maximize throughput for their use cases. For example, the user may adjust the controls to enable buffering per access type (data or instruction).

NOTE

When reconfiguring the FMC, do not program the control and configuration inputs to the FMC while the program flash memory is being accessed. Instead, change them with a routine executing from RAM in supervisor mode.

Chapter 24
Flash Memory Module (FTFA)

24.1 Introduction

NOTE

For the chip-specific implementation details of this module's instances, see the chip configuration information.

The flash memory module includes the following accessible memory regions:

- Program flash memory for vector space and code store

Flash memory is ideal for single-supply applications, permitting in-the-field erase and reprogramming operations without the need for any external high voltage power sources.

The flash memory module includes a memory controller that executes commands to modify flash memory contents. An erased bit reads '1' and a programmed bit reads '0'. The programming operation is unidirectional; it can only move bits from the '1' state (erased) to the '0' state (programmed). Only the erase operation restores bits from '0' to '1'; bits cannot be programmed from a '0' to a '1'.

CAUTION

A flash memory location must be in the erased state before being programmed. Cumulative programming of bits (back-to-back program operations without an intervening erase) within a flash memory location is not allowed. Re-programming of existing 0s to 0 is not allowed as this overstresses the device.

The standard shipping condition for flash memory is erased with security disabled. Data loss over time may occur due to degradation of the erased ('1') states and/or programmed ('0') states. Therefore, it is recommended that each flash block or sector be re-erased immediately prior to factory programming to ensure that the full data retention capability is achieved.

24.1.1 Features

The flash memory module includes the following features.

NOTE

See the device's Chip Configuration details for the exact amount of flash memory available on your device.

24.1.1.1 Program Flash Memory Features

- Sector size of 1 KB
- Program flash protection scheme prevents accidental program or erase of stored data
- Automated, built-in, program and erase algorithms with verify

24.1.1.2 Other Flash Memory Module Features

- Internal high-voltage supply generator for flash memory program and erase operations
- Optional interrupt generation upon flash command completion
- Supports MCU security mechanisms which prevent unauthorized access to the flash memory contents

24.1.2 Block Diagram

The block diagram of the flash memory module is shown in the following figure.

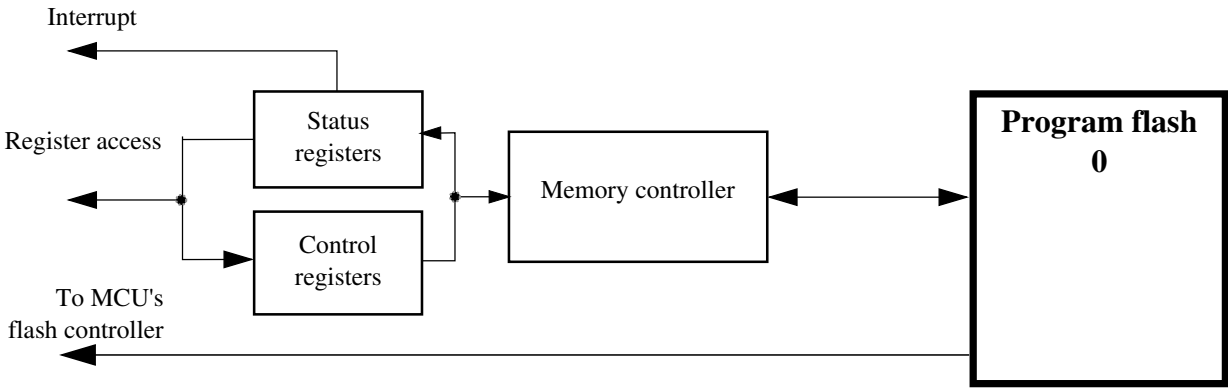

Figure 24-1. Flash Block Diagram

24.1.3 Glossary

Command write sequence — A series of MCU writes to the flash FCCOB register group that initiates and controls the execution of flash algorithms that are built into the flash memory module.

Endurance — The number of times that a flash memory location can be erased and reprogrammed.

FCCOB (Flash Common Command Object) — A group of flash registers that are used to pass command, address, data, and any associated parameters to the memory controller in the flash memory module.

Flash block — A macro within the flash memory module which provides the nonvolatile memory storage.

Flash Memory Module — All flash blocks plus a flash management unit providing high-level control and an interface to MCU buses.

IFR — Nonvolatile information register found in each flash block, separate from the main memory array.

NVM — Nonvolatile memory. A memory technology that maintains stored data during power-off. The flash array is an NVM using NOR-type flash memory technology.

NVM Normal Mode — An NVM mode that provides basic user access to flash memory module resources. The CPU or other bus masters initiate flash program and erase operations (or other flash commands) using writes to the FCCOB register group in the flash memory module.

NVM Special Mode — An NVM mode enabling external, off-chip access to the memory resources in the flash memory module. A reduced flash command set is available when the MCU is secured. See the Chip Configuration details for information on when this mode is used.

Longword — 32 bits of data with an aligned longword having byte-address[1:0] = 00.

Word — 16 bits of data with an aligned word having byte-address[0] = 0.

Program flash — The program flash memory provides nonvolatile storage for vectors and code store.

Program flash Sector — The smallest portion of the program flash memory (consecutive addresses) that can be erased.

Retention — The length of time that data can be kept in the NVM without experiencing errors upon readout. Since erased (1) states are subject to degradation just like programmed (0) states, the data retention limit may be reached from the last erase operation (not from the programming time).

RWW— Read-While-Write. The ability to simultaneously read from one memory resource while commanded operations are active in another memory resource.

Secure — An MCU state conveyed to the flash memory module as described in the Chip Configuration details for this device. In the secure state, reading and changing NVM contents is restricted.

24.2 External Signal Description

The flash memory module contains no signals that connect off-chip.

24.3 Memory Map and Registers

This section describes the memory map and registers for the flash memory module. Data read from unimplemented memory space in the flash memory module is undefined. Writes to unimplemented or reserved memory space (registers) in the flash memory module are ignored.

24.3.1 Flash Configuration Field Description

The program flash memory contains a 16-byte flash configuration field that stores default protection settings (loaded on reset) and security information that allows the MCU to restrict access to the flash memory module.

Flash Configuration Field Byte Address	Size (Bytes)	Field Description
0x0_0400 - 0x0_0407	8	Backdoor Comparison Key. Refer to Verify Backdoor Access Key Command and Unsecuring the Chip Using Backdoor Key Access.
0x0_0408 - 0x0_040B	4	Program flash protection bytes. Refer to the description of the Program Flash Protection Registers (FPROT0-3).
0x0_040F	1	Reserved
0x0_040E	1	Reserved
0x0_040D	1	Flash nonvolatile option byte. Refer to the description of the Flash Option Register (FOPT).
0x0_040C	1	Flash security byte. Refer to the description of the Flash Security Register (FSEC).

24.3.2 Program Flash IFR Map

The program flash IFR is nonvolatile information memory that can be read freely, but the user has no erase and limited program capabilities (see the Read Once, Program Once, and Read Resource commands in Read Once Command, Program Once Command and Read Resource Command). The contents of the program flash IFR are summarized in the following table and further described in the subsequent paragraphs.

The program flash IFR is located within the program flash 0 memory block.

Address Range	Size (Bytes)	Field Description
0x00 – 0xBF	192	Reserved
0xC0 – 0xFF	64	Program Once Field

24.3.2.1 Program Once Field

The Program Once Field in the program flash IFR provides 64 bytes of user data storage separate from the program flash main array. The user can program the Program Once Field one time only as there is no program flash IFR erase mechanism available to the

user. The Program Once Field can be read any number of times. This section of the program flash IFR is accessed in 4-Byte records using the Read Once and Program Once commands (see Read Once Command and Program Once Command).

24.3.3 Register Descriptions

The flash memory module contains a set of memory-mapped control and status registers.

NOTE

While a command is running (FSTAT[CCIF]=0), register writes are not accepted to any register except FCNFG and FSTAT. The no-write rule is relaxed during the start-up reset sequence, prior to the initial rise of CCIF. During this initialization period the user may write any register. All register writes are also disabled (except for registers FCNFG and FSTAT) whenever an erase suspend request is active (FCNFG[ERSSUSP]=1).

FTFA memory map

Absolute address (hex)	Register name	Width (in bits)	Access	Reset value	Section/ page
4002_0000	Flash Status Register (FTFA_FSTAT)	8	R/W	00h	24.3.3.1/ 309
4002_0001	Flash Configuration Register (FTFA_FCNFG)	8	R/W	00h	24.3.3.2/ 311
4002_0002	Flash Security Register (FTFA_FSEC)	8	R	Undefined	24.3.3.3/ 312
4002_0003	Flash Option Register (FTFA_FOPT)	8	R	Undefined	24.3.3.4/ 313
4002_0004	Flash Common Command Object Registers (FTFA_FCCOB3)	8	R/W	00h	24.3.3.5/ 314
4002_0005	Flash Common Command Object Registers (FTFA_FCCOB2)	8	R/W	00h	24.3.3.5/ 314
4002_0006	Flash Common Command Object Registers (FTFA_FCCOB1)	8	R/W	00h	24.3.3.5/ 314
4002_0007	Flash Common Command Object Registers (FTFA_FCCOB0)	8	R/W	00h	24.3.3.5/ 314
4002_0008	Flash Common Command Object Registers (FTFA_FCCOB7)	8	R/W	00h	24.3.3.5/ 314
4002_0009	Flash Common Command Object Registers (FTFA_FCCOB6)	8	R/W	00h	24.3.3.5/ 314
4002_000A	Flash Common Command Object Registers (FTFA_FCCOB5)	8	R/W	00h	24.3.3.5/ 314

Table continues on the next page...

FTFA memory map (continued)

Absolute address (hex)	Register name	Width (in bits)	Access	Reset value	Section/ page
4002_000B	Flash Common Command Object Registers (FTFA_FCCOB4)	8	R/W	00h	24.3.3.5/ 314
4002_000C	Flash Common Command Object Registers (FTFA_FCCOBB)	8	R/W	00h	24.3.3.5/ 314
4002_000D	Flash Common Command Object Registers (FTFA_FCCOBA)	8	R/W	00h	24.3.3.5/ 314
4002_000E	Flash Common Command Object Registers (FTFA_FCCOB9)	8	R/W	00h	24.3.3.5/ 314
4002_000F	Flash Common Command Object Registers (FTFA_FCCOB8)	8	R/W	00h	24.3.3.5/ 314
4002_0010	Program Flash Protection Registers (FTFA_FPROT3)	8	R/W	Undefined	24.3.3.6/ 315
4002_0011	Program Flash Protection Registers (FTFA_FPROT2)	8	R/W	Undefined	24.3.3.6/ 315
4002_0012	Program Flash Protection Registers (FTFA_FPROT1)	8	R/W	Undefined	24.3.3.6/ 315
4002_0013	Program Flash Protection Registers (FTFA_FPROT0)	8	R/W	Undefined	24.3.3.6/ 315

24.3.3.1 Flash Status Register (FTFA_FSTAT)

The FSTAT register reports the operational status of the flash memory module.

The CCIF, RDCOLERR, ACCERR, and FPVIOL bits are readable and writable. The MGSTAT0 bit is read only. The unassigned bits read 0 and are not writable.

NOTE

When set, the Access Error (ACCERR) and Flash Protection Violation (FPVIOL) bits in this register prevent the launch of any more commands until the flag is cleared (by writing a one to it).

Address: 4002_0000h base + 0h offset = 4002_0000h

Bit	7	6	5	4	3	2	1	0
Read	CCIF	RDCOLERR	ACCERR	FPVIOL	0			MGSTAT0
Write	w1c	w1c	w1c	w1c				
Reset	0	0	0	0	0	0	0	0

FTFA_FSTAT field descriptions

Field	Description
7 CCIF	Command Complete Interrupt Flag The CCIF flag indicates that a flash command has completed. The CCIF flag is cleared by writing a 1 to CCIF to launch a command, and CCIF stays low until command completion or command violation. The CCIF bit is reset to 0 but is set to 1 by the memory controller at the end of the reset initialization sequence. Depending on how quickly the read occurs after reset release, the user may or may not see the 0 hardware reset value. 0 Flash command in progress 1 Flash command has completed
6 RDCOLERR	Flash Read Collision Error Flag The RDCOLERR error bit indicates that the MCU attempted a read from a flash memory resource that was being manipulated by a flash command (CCIF=0). Any simultaneous access is detected as a collision error by the block arbitration logic. The read data in this case cannot be guaranteed. The RDCOLERR bit is cleared by writing a 1 to it. Writing a 0 to RDCOLERR has no effect. 0 No collision error detected 1 Collision error detected
5 ACCERR	Flash Access Error Flag The ACCERR error bit indicates an illegal access has occurred to a flash memory resource caused by a violation of the command write sequence or issuing an illegal flash command. While ACCERR is set, the CCIF flag cannot be cleared to launch a command. The ACCERR bit is cleared by writing a 1 to it. Writing a 0 to the ACCERR bit has no effect. 0 No access error detected 1 Access error detected
4 FPVIOL	Flash Protection Violation Flag The FPVIOL error bit indicates an attempt was made to program or erase an address in a protected area of program flash memory during a command write sequence . While FPVIOL is set, the CCIF flag cannot be cleared to launch a command. The FPVIOL bit is cleared by writing a 1 to it. Writing a 0 to the FPVIOL bit has no effect. 0 No protection violation detected 1 Protection violation detected
3–1 Reserved	This field is reserved. This read-only field is reserved and always has the value 0.
0 MGSTAT0	Memory Controller Command Completion Status Flag The MGSTAT0 status flag is set if an error is detected during execution of a flash command or during the flash reset sequence. As a status flag, this bit cannot (and need not) be cleared by the user like the other error flags in this register. The value of the MGSTAT0 bit for "command-N" is valid only at the end of the "command-N" execution when CCIF=1 and before the next command has been launched. At some point during the execution of "command-N+1," the previous result is discarded and any previous error is cleared.

24.3.3.2 Flash Configuration Register (FTFA_FCNFG)

This register provides information on the current functional state of the flash memory module.

The erase control bits (ERSAREQ and ERSSUSP) have write restrictions. The unassigned bits read as noted and are not writable.

Address: 4002_0000h base + 1h offset = 4002_0001h

Bit	7	6	5	4	3	2	1	0
Read	CCIE	RDCOLLIE	ERSAREQ	ERSSUSP	0	0	0	0
Write								
Reset	0	0	0	0	0	0	0	0

FTFA_FCNFG field descriptions

Field	Description
7 CCIE	Command Complete Interrupt Enable The CCIE bit controls interrupt generation when a flash command completes. 0 Command complete interrupt disabled 1 Command complete interrupt enabled. An interrupt request is generated whenever the FSTAT[CCIF] flag is set.
6 RDCOLLIE	Read Collision Error Interrupt Enable The RDCOLLIE bit controls interrupt generation when a flash memory read collision error occurs. 0 Read collision error interrupt disabled 1 Read collision error interrupt enabled. An interrupt request is generated whenever a flash memory read collision error is detected (see the description of FSTAT[RDCOLERR]).
5 ERSAREQ	Erase All Request This bit issues a request to the memory controller to execute the Erase All Blocks command and release security. ERSAREQ is not directly writable but is under indirect user control. Refer to the device's Chip Configuration details on how to request this command. The ERSAREQ bit sets when an erase all request is triggered external to the flash memory module and CCIF is set (no command is currently being executed). ERSAREQ is cleared by the flash memory module when the operation completes. 0 No request or request complete 1 Request to: 1. run the Erase All Blocks command, 2. verify the erased state, 3. program the security byte in the Flash Configuration Field to the unsecure state, and 4. release MCU security by setting the FSEC[SEC] field to the unsecure state.
4 ERSSUSP	Erase Suspend The ERSSUSP bit allows the user to suspend (interrupt) the Erase Flash Sector command while it is executing.

Table continues on the next page...

FTFA_FCNFG field descriptions (continued)

Field	Description
	0 No suspend requested 1 Suspend the current Erase Flash Sector command execution.
3 Reserved	This field is reserved. This read-only field is reserved and always has the value 0.
2 Reserved	This field is reserved. This read-only field is reserved and always has the value 0.
1 Reserved	This field is reserved. This read-only field is reserved and always has the value 0.
0 Reserved	This field is reserved. This read-only field is reserved and always has the value 0.

24.3.3.3 Flash Security Register (FTFA_FSEC)

This read-only register holds all bits associated with the security of the MCU and flash memory module.

During the reset sequence, the register is loaded with the contents of the flash security byte in the Flash Configuration Field located in program flash memory. The flash basis for the values is signified by X in the reset value.

Address: 4002_0000h base + 2h offset = 4002_0002h

Bit	7	6	5	4	3	2	1	0
Read	KEYEN		MEEN		FSLACC		SEC	
Write								
Reset	x*	x*	x*	x*	x*	x*	x*	x*

* Notes:
- x = Undefined at reset.

FTFA_FSEC field descriptions

Field	Description
7–6 KEYEN	Backdoor Key Security Enable These bits enable and disable backdoor key access to the flash memory module. 00 Backdoor key access disabled 01 Backdoor key access disabled (preferred KEYEN state to disable backdoor key access) 10 Backdoor key access enabled 11 Backdoor key access disabled
5–4 MEEN	Mass Erase Enable Bits

Table continues on the next page...

FTFA_FSEC field descriptions (continued)

Field	Description
	Enables and disables mass erase capability of the flash memory module. The state of the MEEN bits is only relevant when the SEC bits are set to secure outside of NVM Normal Mode. When the SEC field is set to unsecure, the MEEN setting does not matter. 00 Mass erase is enabled 01 Mass erase is enabled 10 Mass erase is disabled 11 Mass erase is enabled
3–2 FSLACC	Freescale Failure Analysis Access Code These bits enable or disable access to the flash memory contents during returned part failure analysis at Freescale. When SEC is secure and FSLACC is denied, access to the program flash contents is denied and any failure analysis performed by Freescale factory test must begin with a full erase to unsecure the part. When access is granted (SEC is unsecure, or SEC is secure and FSLACC is granted), Freescale factory testing has visibility of the current flash contents. The state of the FSLACC bits is only relevant when the SEC bits are set to secure. When the SEC field is set to unsecure, the FSLACC setting does not matter. 00 Freescale factory access granted 01 Freescale factory access denied 10 Freescale factory access denied 11 Freescale factory access granted
SEC	Flash Security These bits define the security state of the MCU. In the secure state, the MCU limits access to flash memory module resources. The limitations are defined per device and are detailed in the Chip Configuration details. If the flash memory module is unsecured using backdoor key access, the SEC bits are forced to 10b. 00 MCU security status is secure 01 MCU security status is secure 10 MCU security status is unsecure (The standard shipping condition of the flash memory module is unsecure.) 11 MCU security status is secure

24.3.3.4 Flash Option Register (FTFA_FOPT)

The flash option register allows the MCU to customize its operations by examining the state of these read-only bits, which are loaded from NVM at reset. The function of the bits is defined in the device's Chip Configuration details.

All bits in the register are read-only .

During the reset sequence, the register is loaded from the flash nonvolatile option byte in the Flash Configuration Field located in program flash memory. The flash basis for the values is signified by X in the reset value.

Address: 4002_0000h base + 3h offset = 4002_0003h

Bit	7	6	5	4	3	2	1	0
Read	OPT							
Write								
Reset	x*	x*	x*	x*	x*	x*	x*	x*

* Notes:
- x = Undefined at reset.

FTFA_FOPT field descriptions

Field	Description
OPT	Nonvolatile Option These bits are loaded from flash to this register at reset. Refer to the device's Chip Configuration details for the definition and use of these bits.

24.3.3.5 Flash Common Command Object Registers (FTFA_FCCOB*n*)

The FCCOB register group provides 12 bytes for command codes and parameters. The individual bytes within the set append a 0-B hex identifier to the FCCOB register name: FCCOB0, FCCOB1, ..., FCCOBB.

Address: 4002_0000h base + 4h offset + (1d × i), where i=0d to 11d

Bit	7	6	5	4	3	2	1	0
Read Write	CCOBn							
Reset	0	0	0	0	0	0	0	0

FTFA_FCCOB*n* field descriptions

Field	Description
CCOBn	The FCCOB register provides a command code and relevant parameters to the memory controller. The individual registers that compose the FCCOB data set can be written in any order, but you must provide all needed values, which vary from command to command. First, set up all required FCCOB fields and then initiate the command's execution by writing a 1 to the FSTAT[CCIF] bit. This clears the CCIF bit, which locks all FCCOB parameter fields and they cannot be changed by the user until the command completes (CCIF returns to 1). No command buffering or queueing is provided; the next command can be loaded only after the current command completes. Some commands return information to the FCCOB registers. Any values returned to FCCOB are available for reading after the FSTAT[CCIF] flag returns to 1 by the memory controller. The following table shows a generic flash command format. The first FCCOB register, FCCOB0, always contains the command code. This 8-bit value defines the command to be executed. The command code is followed by the parameters required for this specific flash command, typically an address and/or data values.

FTFA_FCCOB*n* field descriptions (continued)

<table>
<tr><th>Field</th><th>Description</th></tr>
<tr><td></td><td>
NOTE: The command parameter table is written in terms of FCCOB Number (which is equivalent to the byte number). This number is a reference to the FCCOB register name and is not the register address.
<table>
<tr><th>FCCOB Number</th><th>Typical Command Parameter Contents [7:0]</th></tr>
<tr><td>0</td><td>FCMD (a code that defines the flash command)</td></tr>
<tr><td>1</td><td>Flash address [23:16]</td></tr>
<tr><td>2</td><td>Flash address [15:8]</td></tr>
<tr><td>3</td><td>Flash address [7:0]</td></tr>
<tr><td>4</td><td>Data Byte 0</td></tr>
<tr><td>5</td><td>Data Byte 1</td></tr>
<tr><td>6</td><td>Data Byte 2</td></tr>
<tr><td>7</td><td>Data Byte 3</td></tr>
<tr><td>8</td><td>Data Byte 4</td></tr>
<tr><td>9</td><td>Data Byte 5</td></tr>
<tr><td>A</td><td>Data Byte 6</td></tr>
<tr><td>B</td><td>Data Byte 7</td></tr>
</table>
FCCOB Endianness and Multi-Byte Access :
The FCCOB register group uses a big endian addressing convention. For all command parameter fields larger than 1 byte, the most significant data resides in the lowest FCCOB register number. The FCCOB register group may be read and written as individual bytes, aligned words (2 bytes) or aligned longwords (4 bytes).
</td></tr>
</table>

24.3.3.6 Program Flash Protection Registers (FTFA_FPROT*n*)

The FPROT registers define which logical program flash regions are protected from program and erase operations. Protected flash regions cannot have their content changed; that is, these regions cannot be programmed and cannot be erased by any flash command. Unprotected regions can be changed by program and erase operations.

The four FPROT registers allow up to 32 protectable regions. Each bit protects a 1/32 region of the program flash memory except for memory configurations with less than 32 KB of program flash where each assigned bit protects 1 KB . For configurations with 24 KB of program flash memory or less, FPROT0 is not used. For configurations with 16 KB of program flash memory or less, FPROT1 is not used. For configurations with 8 KB of program flash memory, FPROT2 is not used. The bitfields are defined in each register as follows:

Program flash protection register	Program flash protection bits
FPROT0	PROT[31:24]
FPROT1	PROT[23:16]
FPROT2	PROT[15:8]
FPROT3	PROT[7:0]

During the reset sequence, the FPROT registers are loaded with the contents of the program flash protection bytes in the Flash Configuration Field as indicated in the following table.

Program flash protection register	Flash Configuration Field offset address
FPROT0	0x000B
FPROT1	0x000A
FPROT2	0x0009
FPROT3	0x0008

To change the program flash protection that is loaded during the reset sequence, unprotect the sector of program flash memory that contains the Flash Configuration Field. Then, reprogram the program flash protection byte.

Address: 4002_0000h base + 10h offset + (1d × i), where i=0d to 3d

Bit	7	6	5	4	3	2	1	0
Read Write	PROT							
Reset	x*	x*	x*	x*	x*	x*	x*	x*

* Notes:
- x = Undefined at reset.

FTFA_FPROT*n* field descriptions

Field	Description
PROT	Program Flash Region Protect Each program flash region can be protected from program and erase operations by setting the associated PROT bit. **In NVM Normal mode:** The protection can only be increased, meaning that currently unprotected memory can be protected, but currently protected memory cannot be unprotected. Since unprotected regions are marked with a 1 and protected regions use a 0, only writes changing 1s to 0s are accepted. This 1-to-0 transition check is performed on a bit-by-bit basis. Those FPROT bits with 1-to-0 transitions are accepted while all bits with 0-to-1 transitions are ignored. **In NVM Special mode:** All bits of FPROT are writable without restriction. Unprotected areas can be protected and protected areas can be unprotected. **Restriction:** The user must never write to any FPROT register while a command is running (CCIF=0). Trying to alter data in any protected area in the program flash memory results in a protection violation error and sets the FSTAT[FPVIOL] bit. A full block erase of a program flash block is not possible if it contains any protected region.

FTFA_FPROT*n* field descriptions (continued)

Field	Description
	Each bit in the 32-bit protection register represents 1/32 of the total program flash except for configurations where program flash memory is less than 32 KB. For configurations with less than 32 KB of program flash memory, each assigned bit represents 1 KB. 0 Program flash region is protected. 1 Program flash region is not protected

24.4 Functional Description

The following sections describe functional details of the flash memory module.

24.4.1 Flash Protection

Individual regions within the flash memory can be protected from program and erase operations. Protection is controlled by the following registers:

- FPROT*n* —
  - For 2^n program flash sizes, four registers typically protect 32 regions of the program flash memory as shown in the following figure

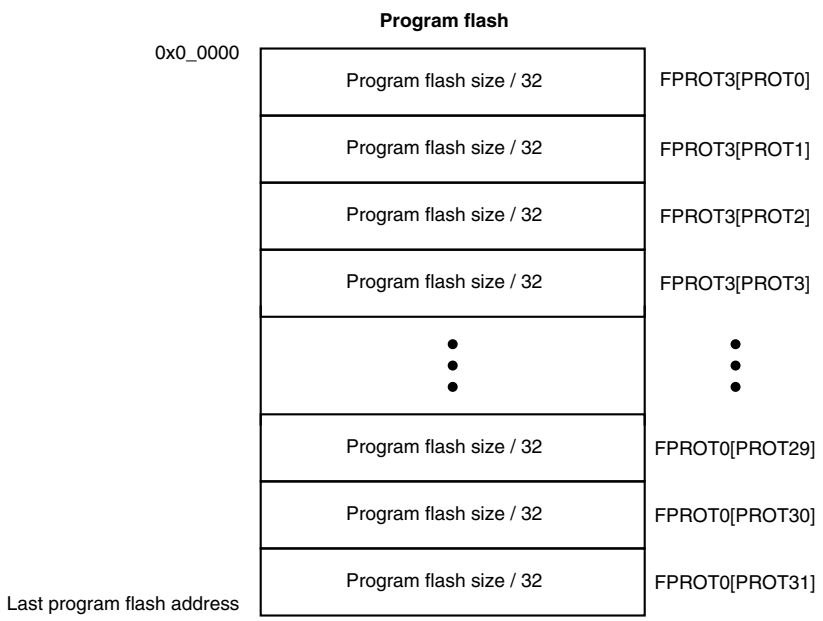

Figure 24-24. Program flash protection

24.4.2 Interrupts

The flash memory module can generate interrupt requests to the MCU upon the occurrence of various flash events. These interrupt events and their associated status and control bits are shown in the following table.

Table 24-24. Flash Interrupt Sources

Flash Event	Readable Status Bit	Interrupt Enable Bit
Flash Command Complete	FSTAT[CCIF]	FCNFG[CCIE]
Flash Read Collision Error	FSTAT[RDCOLERR]	FCNFG[RDCOLLIE]

Note

Vector addresses and their relative interrupt priority are determined at the MCU level.

Some devices also generate a bus error response as a result of a Read Collision Error event. See the chip configuration information to determine if a bus error response is also supported.

24.4.3 Flash Operation in Low-Power Modes

24.4.3.1 Wait Mode

When the MCU enters wait mode, the flash memory module is not affected. The flash memory module can recover the MCU from wait via the command complete interrupt (see Interrupts).

24.4.3.2 Stop Mode

When the MCU requests stop mode, if a flash command is active (CCIF = 0) the command execution completes before the MCU is allowed to enter stop mode.

CAUTION

The MCU should never enter stop mode while any flash command is running (CCIF = 0).

NOTE

While the MCU is in very-low-power modes (VLPR, VLPW, VLPS), the flash memory module does not accept flash commands.

24.4.4 Functional Modes of Operation

The flash memory module has two operating modes: NVM Normal and NVM Special. The operating mode affects the command set availability (see Table 24-25). Refer to the Chip Configuration details of this device for how to activate each mode.

24.4.5 Flash Reads and Ignored Writes

The flash memory module requires only the flash address to execute a flash memory read.

The MCU must not read from the flash memory while commands are running (as evidenced by CCIF=0) on that block. Read data cannot be guaranteed from a flash block while any command is processing within that block. The block arbitration logic detects any simultaneous access and reports this as a read collision error (see the FSTAT[RDCOLERR] bit).

24.4.6 Read While Write (RWW)

The following simultaneous accesses are not allowed:

- Reading from program flash memory space while a flash command is active (CCIF=0).

24.4.7 Flash Program and Erase

All flash functions except read require the user to setup and launch a flash command through a series of peripheral bus writes. The user cannot initiate any further flash commands until notified that the current command has completed. The flash command structure and operation are detailed in Flash Command Operations.

24.4.8 Flash Command Operations

Flash command operations are typically used to modify flash memory contents. The next sections describe:

- The command write sequence used to set flash command parameters and launch execution
- A description of all flash commands available

24.4.8.1 Command Write Sequence

Flash commands are specified using a command write sequence illustrated in Figure 24-25. The flash memory module performs various checks on the command (FCCOB) content and continues with command execution if all requirements are fulfilled.

Before launching a command, the ACCERR and FPVIOL bits in the FSTAT register must be zero and the CCIF flag must read 1 to verify that any previous command has completed. If CCIF is zero, the previous command execution is still active, a new command write sequence cannot be started, and all writes to the FCCOB registers are ignored.

Attempts to launch a flash command in VLP mode will be ignored.

24.4.8.1.1 Load the FCCOB Registers

The user must load the FCCOB registers with all parameters required by the desired flash command. The individual registers that make up the FCCOB data set can be written in any order.

24.4.8.1.2 Launch the Command by Clearing CCIF

Once all relevant command parameters have been loaded, the user launches the command by clearing the FSTAT[CCIF] bit by writing a '1' to it. The CCIF flag remains zero until the flash command completes.

The FSTAT register contains a blocking mechanism that prevents a new command from launching (can't clear CCIF) if the previous command resulted in an access error (FSTAT[ACCERR]=1) or a protection violation (FSTAT[FPVIOL]=1). In error scenarios, two writes to FSTAT are required to initiate the next command: the first write clears the error flags, the second write clears CCIF.

24.4.8.1.3 Command Execution and Error Reporting

The command processing has several steps:

1. The flash memory module reads the command code and performs a series of parameter checks and protection checks, if applicable, which are unique to each command.

   If the parameter check fails, the FSTAT[ACCERR] (access error) flag is set. ACCERR reports invalid instruction codes and out-of bounds addresses. Usually, access errors suggest that the command was not set-up with valid parameters in the FCCOB register group.

   Program and erase commands also check the address to determine if the operation is requested to execute on protected areas. If the protection check fails, the FSTAT[FPVIOL] (protection error) flag is set.

   Command processing never proceeds to execution when the parameter or protection step fails. Instead, command processing is terminated after setting the FSTAT[CCIF] bit.

2. If the parameter and protection checks pass, the command proceeds to execution. Run-time errors, such as failure to erase verify, may occur during the execution phase. Run-time errors are reported in the FSTAT[MGSTAT0] bit. A command may have access errors, protection errors, and run-time errors, but the run-time errors are not seen until all access and protection errors have been corrected.
3. Command execution results, if applicable, are reported back to the user via the FCCOB and FSTAT registers.
4. The flash memory module sets the FSTAT[CCIF] bit signifying that the command has completed.

The flow for a generic command write sequence is illustrated in the following figure.

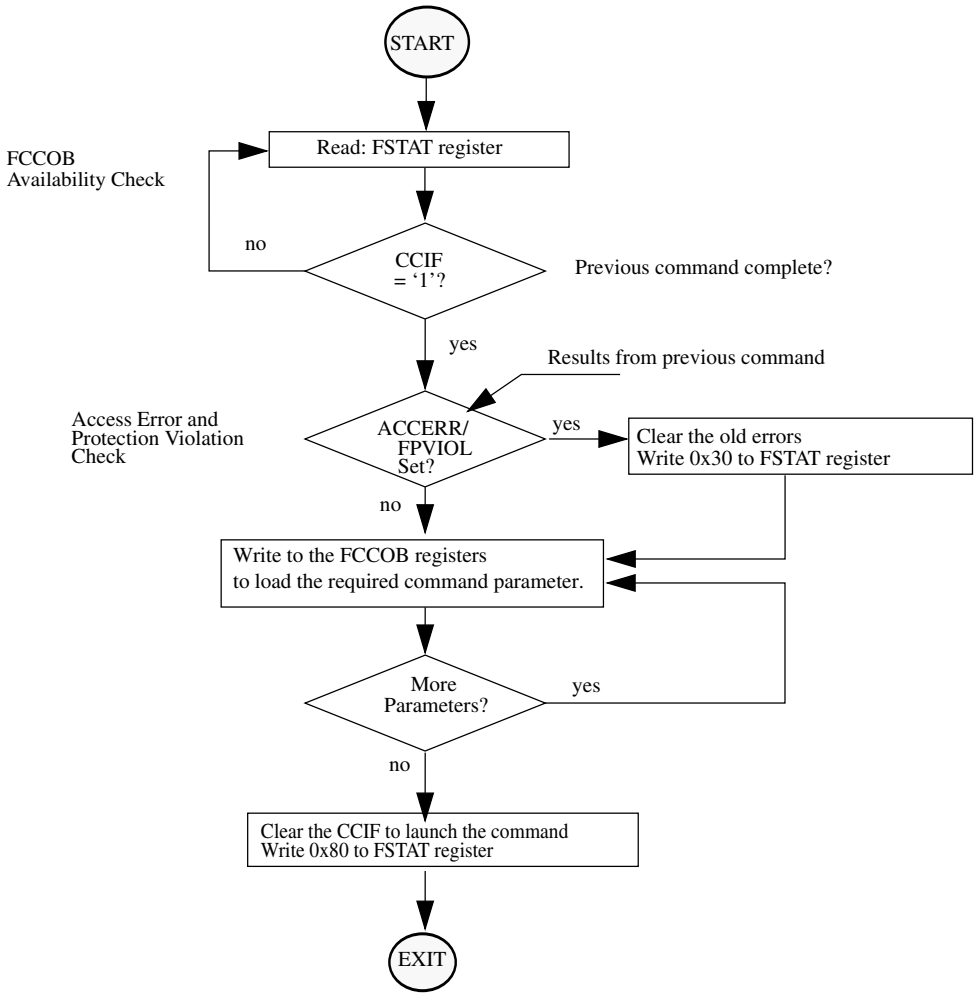

Figure 24-25. Generic Flash Command Write Sequence Flowchart

24.4.8.2 Flash Commands

The following table summarizes the function of all flash commands.

FCMD	Command	Program flash	Function
0x01	Read 1s Section	×	Verify that a given number of program flash locations from a starting address are erased.
0x02	Program Check	×	Tests previously-programmed locations at margin read levels.
0x03	Read Resource	IFR, ID	Read 4 bytes from program flash IFR or version ID.
0x06	Program Longword	×	Program 4 bytes in a program flash block.

Table continues on the next page...

FCMD	Command	Program flash	Function
0x09	Erase Flash Sector	×	Erase all bytes in a program flash sector.
0x40	Read 1s All Blocks	×	Verify that the program flash block is erased then release MCU security.
0x41	Read Once	IFR	Read 4 bytes of a dedicated 64 byte field in the program flash 0 IFR.
0x43	Program Once	IFR	One-time program of 4 bytes of a dedicated 64-byte field in the program flash 0 IFR.
0x44	Erase All Blocks	×	Erase the program flash block, verify-erase and release MCU security. **NOTE:** An erase is only possible when all memory locations are unprotected.
0x45	Verify Backdoor Access Key	×	Release MCU security after comparing a set of user-supplied security keys to those stored in the program flash.

24.4.8.3 Flash Commands by Mode

The following table shows the flash commands that can be executed in each flash operating mode.

Table 24-25. Flash Commands by Mode

FCMD	Command	NVM Normal			NVM Special		
		Unsecure	Secure	MEEN=10	Unsecure	Secure	MEEN=10
0x01	Read 1s Section	×	×	×	×	—	—
0x02	Program Check	×	×	×	×	—	—
0x03	Read Resource	×	×	×	×	—	—
0x06	Program Longword	×	×	×	×	—	—
0x09	Erase Flash Sector	×	×	×	×	—	—
0x40	Read 1s All Blocks	×	×	×	×	×	—
0x41	Read Once	×	×	×	×	—	—
0x43	Program Once	×	×	×	×	—	—
0x44	Erase All Blocks	×	×	×	×	×	—
0x45	Verify Backdoor Access Key	×	×	×	×	—	—

24.4.9 Margin Read Commands

The Read-1s commands (Read 1s All Blocks and Read 1s Section) and the Program Check command have a margin choice parameter that allows the user to apply non-standard read reference levels to the program flash array reads performed by these commands. Using the preset 'user' and 'factory' margin levels, these commands perform their associated read operations at tighter tolerances than a 'normal' read. These non-standard read levels are applied only during the command execution. All simple (uncommanded) flash array reads to the MCU always use the standard, un-margined, read reference level.

Only the 'normal' read level should be employed during normal flash usage. The non-standard, 'user' and 'factory' margin levels should be employed only in special cases. They can be used during special diagnostic routines to gain confidence that the device is not suffering from the end-of-life data loss customary of flash memory devices.

Erased ('1') and programmed ('0') bit states can degrade due to elapsed time and data cycling (number of times a bit is erased and re-programmed). The lifetime of the erased states is relative to the last erase operation. The lifetime of the programmed states is measured from the last program time.

The 'user' and 'factory' levels become, in effect, a minimum safety margin; i.e. if the reads pass at the tighter tolerances of the 'user' and 'factory' margins, then the 'normal' reads have at least this much safety margin before they experience data loss.

The 'user' margin is a small delta to the normal read reference level. 'User' margin levels can be employed to check that flash memory contents have adequate margin for normal level read operations. If unexpected read results are encountered when checking flash memory contents at the 'user' margin levels, loss of information might soon occur during 'normal' readout.

The 'factory' margin is a bigger deviation from the norm, a more stringent read criteria that should only be attempted immediately (or very soon) after completion of an erase or program command, early in the cycling life. 'Factory' margin levels can be used to check that flash memory contents have adequate margin for long-term data retention at the normal level setting. If unexpected results are encountered when checking flash memory contents at 'factory' margin levels, the flash memory contents should be erased and reprogrammed.

CAUTION

Factory margin levels must only be used during verify of the initial factory programming.

24.4.10 Flash Command Description

This section describes all flash commands that can be launched by a command write sequence. The flash memory module sets the FSTAT[ACCERR] bit and aborts the command execution if any of the following illegal conditions occur:

- There is an unrecognized command code in the FCCOB FCMD field.
- There is an error in a FCCOB field for the specific commands. Refer to the error handling table provided for each command.

Ensure that the ACCERR and FPVIOL bits in the FSTAT register are cleared prior to starting the command write sequence. As described in Launch the Command by Clearing CCIF, a new command cannot be launched while these error flags are set.

Do not attempt to read a flash block while the flash memory module is running a command (CCIF = 0) on that same block. The flash memory module may return invalid data to the MCU with the collision error flag (FSTAT[RDCOLERR]) set.

CAUTION

Flash data must be in the erased state before being programmed. Cumulative programming of bits (adding more zeros) is not allowed.

24.4.10.1 Read 1s Section Command

The Read 1s Section command checks if a section of program flash memory is erased to the specified read margin level. The Read 1s Section command defines the starting address and the number of longwords to be verified.

Table 24-26. Read 1s Section Command FCCOB Requirements

FCCOB Number	FCCOB Contents [7:0]
0	0x01 (RD1SEC)
1	Flash address [23:16] of the first longword to be verified
2	Flash address [15:8] of the first longword to be verified
3	Flash address [7:0][1] of the first longword to be verified
4	Number of longwords to be verified [15:8]
5	Number of longwords to be verified [7:0]
6	Read-1 Margin Choice

1. Must be longword aligned (Flash address [1:0] = 00).

Upon clearing CCIF to launch the Read 1s Section command, the flash memory module sets the read margin for 1s according to Table 24-27 and then reads all locations within the specified section of flash memory. If the flash memory module fails to read all 1s (i.e. the flash section is not erased), the FSTAT[MGSTAT0] bit is set. The CCIF flag sets after the Read 1s Section operation completes.

Table 24-27. Margin Level Choices for Read 1s Section

Read Margin Choice	Margin Level Description
0x00	Use the 'normal' read level for 1s
0x01	Apply the 'User' margin to the normal read-1 level
0x02	Apply the 'Factory' margin to the normal read-1 level

Table 24-28. Read 1s Section Command Error Handling

Error Condition	Error Bit
Command not available in current mode/security	FSTAT[ACCERR]
An invalid margin code is supplied	FSTAT[ACCERR]
An invalid flash address is supplied	FSTAT[ACCERR]
Flash address is not longword aligned	FSTAT[ACCERR]
The requested section crosses a Flash block boundary	FSTAT[ACCERR]
The requested number of longwords is zero	FSTAT[ACCERR]
Read-1s fails	FSTAT[MGSTAT0]

24.4.10.2 Program Check Command

The Program Check command tests a previously programmed program flash longword to see if it reads correctly at the specified margin level.

Table 24-29. Program Check Command FCCOB Requirements

FCCOB Number	FCCOB Contents [7:0]
0	0x02 (PGMCHK)
1	Flash address [23:16]
2	Flash address [15:8]
3	Flash address [7:0][1]
4	Margin Choice
8	Byte 0 expected data
9	Byte 1 expected data
A	Byte 2 expected data
B	Byte 3 expected data

1. Must be longword aligned (Flash address [1:0] = 00).

Upon clearing CCIF to launch the Program Check command, the flash memory module sets the read margin for 1s according to Table 24-30, reads the specified longword, and compares the actual read data to the expected data provided by the FCCOB. If the comparison at margin-1 fails, the FSTAT[MGSTAT0] bit is set.

The flash memory module then sets the read margin for 0s, re-reads, and compares again. If the comparison at margin-0 fails, the FSTAT[MGSTAT0] bit is set. The CCIF flag is set after the Program Check operation completes.

The supplied address must be longword aligned (the lowest two bits of the byte address must be 00):

- Byte 3 data is written to the supplied byte address ('start'),
- Byte 2 data is programmed to byte address start+0b01,
- Byte 1 data is programmed to byte address start+0b10,
- Byte 0 data is programmed to byte address start+0b11.

NOTE

See the description of margin reads, Margin Read Commands

Table 24-30. Margin Level Choices for Program Check

Read Margin Choice	Margin Level Description
0x01	Read at 'User' margin-1 and 'User' margin-0
0x02	Read at 'Factory' margin-1 and 'Factory' margin-0

Table 24-31. Program Check Command Error Handling

Error Condition	Error Bit
Command not available in current mode/security	FSTAT[ACCERR]
An invalid flash address is supplied	FSTAT[ACCERR]
Flash address is not longword aligned	FSTAT[ACCERR]
An invalid margin choice is supplied	FSTAT[ACCERR]
Either of the margin reads does not match the expected data	FSTAT[MGSTAT0]

24.4.10.3 Read Resource Command

The Read Resource command allows the user to read data from special-purpose memory resources located within the flash memory module. The special-purpose memory resources available include program flash IFR space and the Version ID field. Each resource is assigned a select code as shown in Table 24-33.

Table 24-32. Read Resource Command FCCOB Requirements

FCCOB Number	FCCOB Contents [7:0]
0	0x03 (RDRSRC)
1	Flash address [23:16]
2	Flash address [15:8]
3	Flash address [7:0][1]
Returned Values	
4	Read Data [31:24]
5	Read Data [23:16]
6	Read Data [15:8]
7	Read Data [7:0]
User-provided values	
8	Resource Select Code (see Table 24-33)

1. Must be longword aligned (Flash address [1:0] = 00).

Table 24-33. Read Resource Select Codes

Resource Select Code	Description	Resource Size	Local Address Range
0x00	Program Flash 0 IFR	256 Bytes	0x00_0000 - 0x00_00FF
0x01[1]	Version ID	8 Bytes	0x00_0000 - 0x00_0007

1. Located in program flash 0 reserved space.

After clearing CCIF to launch the Read Resource command, four consecutive bytes are read from the selected resource at the provided relative address and stored in the FCCOB register. The CCIF flag sets after the Read Resource operation completes. The Read Resource command exits with an access error if an invalid resource code is provided or if the address for the applicable area is out-of-range.

Table 24-34. Read Resource Command Error Handling

Error Condition	Error Bit
Command not available in current mode/security	FSTAT[ACCERR]
An invalid resource code is entered	FSTAT[ACCERR]
Flash address is out-of-range for the targeted resource.	FSTAT[ACCERR]
Flash address is not longword aligned	FSTAT[ACCERR]

24.4.10.4 Program Longword Command

The Program Longword command programs four previously-erased bytes in the program flash memory using an embedded algorithm.

CAUTION

A flash memory location must be in the erased state before being programmed. Cumulative programming of bits (back-to-back program operations without an intervening erase) within a flash memory location is not allowed. Re-programming of existing 0s to 0 is not allowed as this overstresses the device.

Table 24-35. Program Longword Command FCCOB Requirements

FCCOB Number	FCCOB Contents [7:0]
0	0x06 (PGM4)
1	Flash address [23:16]
2	Flash address [15:8]
3	Flash address [7:0][1]
4	Byte 0 program value
5	Byte 1 program value
6	Byte 2 program value
7	Byte 3 program value

1. Must be longword aligned (Flash address [1:0] = 00).

Upon clearing CCIF to launch the Program Longword command, the flash memory module programs the data bytes into the flash using the supplied address. The targeted flash locations must be currently unprotected (see the description of the FPROT registers) to permit execution of the Program Longword operation.

The programming operation is unidirectional. It can only move NVM bits from the erased state ('1') to the programmed state ('0'). Erased bits that fail to program to the '0' state are flagged as errors in FSTAT[MGSTAT0]. The CCIF flag is set after the Program Longword operation completes.

The supplied address must be longword aligned (flash address [1:0] = 00):

- Byte 3 data is written to the supplied byte address ('start'),
- Byte 2 data is programmed to byte address start+0b01,
- Byte 1 data is programmed to byte address start+0b10, and
- Byte 0 data is programmed to byte address start+0b11.

Table 24-36. Program Longword Command Error Handling

Error Condition	Error Bit
Command not available in current mode/security	FSTAT[ACCERR]
An invalid flash address is supplied	FSTAT[ACCERR]
Flash address is not longword aligned	FSTAT[ACCERR]
Flash address points to a protected area	FSTAT[FPVIOL]

Table continues on the next page...

Table 24-36. Program Longword Command Error Handling (continued)

Error Condition	Error Bit
Any errors have been encountered during the verify operation	FSTAT[MGSTAT0]

24.4.10.5 Erase Flash Sector Command

The Erase Flash Sector operation erases all addresses in a flash sector.

Table 24-37. Erase Flash Sector Command FCCOB Requirements

FCCOB Number	FCCOB Contents [7:0]
0	0x09 (ERSSCR)
1	Flash address [23:16] in the flash sector to be erased
2	Flash address [15:8] in the flash sector to be erased
3	Flash address [7:0][1] in the flash sector to be erased

1. Must be longword aligned (flash address [1:0] = 00).

After clearing CCIF to launch the Erase Flash Sector command, the flash memory module erases the selected program flash sector and then verifies that it is erased. The Erase Flash Sector command aborts if the selected sector is protected (see the description of the FPROT registers). If the erase-verify fails the FSTAT[MGSTAT0] bit is set. The CCIF flag is set after the Erase Flash Sector operation completes. The Erase Flash Sector command is suspendable (see the FCNFG[ERSSUSP] bit and Figure 24-26).

Table 24-38. Erase Flash Sector Command Error Handling

Error Condition	Error Bit
Command not available in current mode/security	FSTAT[ACCERR]
An invalid Flash address is supplied	FSTAT[ACCERR]
Flash address is not longword aligned	FSTAT[ACCERR]
The selected program flash sector is protected	FSTAT[FPVIOL]
Any errors have been encountered during the verify operation[1]	FSTAT[MGSTAT0]

1. User margin read may be run using the Read 1s Section command to verify all bits are erased.

24.4.10.5.1 Suspending an Erase Flash Sector Operation

To suspend an Erase Flash Sector operation set the FCNFG[ERSSUSP] bit (see Flash Configuration Field Description) when CCIF is clear and the CCOB command field holds the code for the Erase Flash Sector command. During the Erase Flash Sector operation (see Erase Flash Sector Command), the flash memory module samples the state of the ERSSUSP bit at convenient points. If the flash memory module detects that the

ERSSUSP bit is set, the Erase Flash Sector operation is suspended and the flash memory module sets CCIF. While ERSSUSP is set, all writes to flash registers are ignored except for writes to the FSTAT and FCNFG registers.

If an Erase Flash Sector operation effectively completes before the flash memory module detects that a suspend request has been made, the flash memory module clears the ERSSUSP bit prior to setting CCIF. When an Erase Flash Sector operation has been successfully suspended, the flash memory module sets CCIF and leaves the ERSSUSP bit set. While CCIF is set, the ERSSUSP bit can only be cleared to prevent the withdrawal of a suspend request before the flash memory module has acknowledged it.

24.4.10.5.2 Resuming a Suspended Erase Flash Sector Operation

If the ERSSUSP bit is still set when CCIF is cleared to launch the next command, the previous Erase Flash Sector operation resumes. The flash memory module acknowledges the request to resume a suspended operation by clearing the ERSSUSP bit. A new suspend request can then be made by setting ERSSUSP. A single Erase Flash Sector operation can be suspended and resumed multiple times.

There is a minimum elapsed time limit between the request to resume the Erase Flash Sector operation (CCIF is cleared) and the request to suspend the operation again (ERSSUSP is set). This minimum time period is required to ensure that the Erase Flash Sector operation will eventually complete. If the minimum period is continually violated, i.e. the suspend requests come repeatedly and too quickly, no forward progress is made by the Erase Flash Sector algorithm. The resume/suspend sequence runs indefinitely without completing the erase.

24.4.10.5.3 Aborting a Suspended Erase Flash Sector Operation

The user may choose to abort a suspended Erase Flash Sector operation by clearing the ERSSUSP bit prior to clearing CCIF for the next command launch. When a suspended operation is aborted, the flash memory module starts the new command using the new FCCOB contents.

Note

> Aborting the erase leaves the bitcells in an indeterminate, partially-erased state. Data in this sector is not reliable until a new erase command fully completes.

The following figure shows how to suspend and resume the Erase Flash Sector operation.

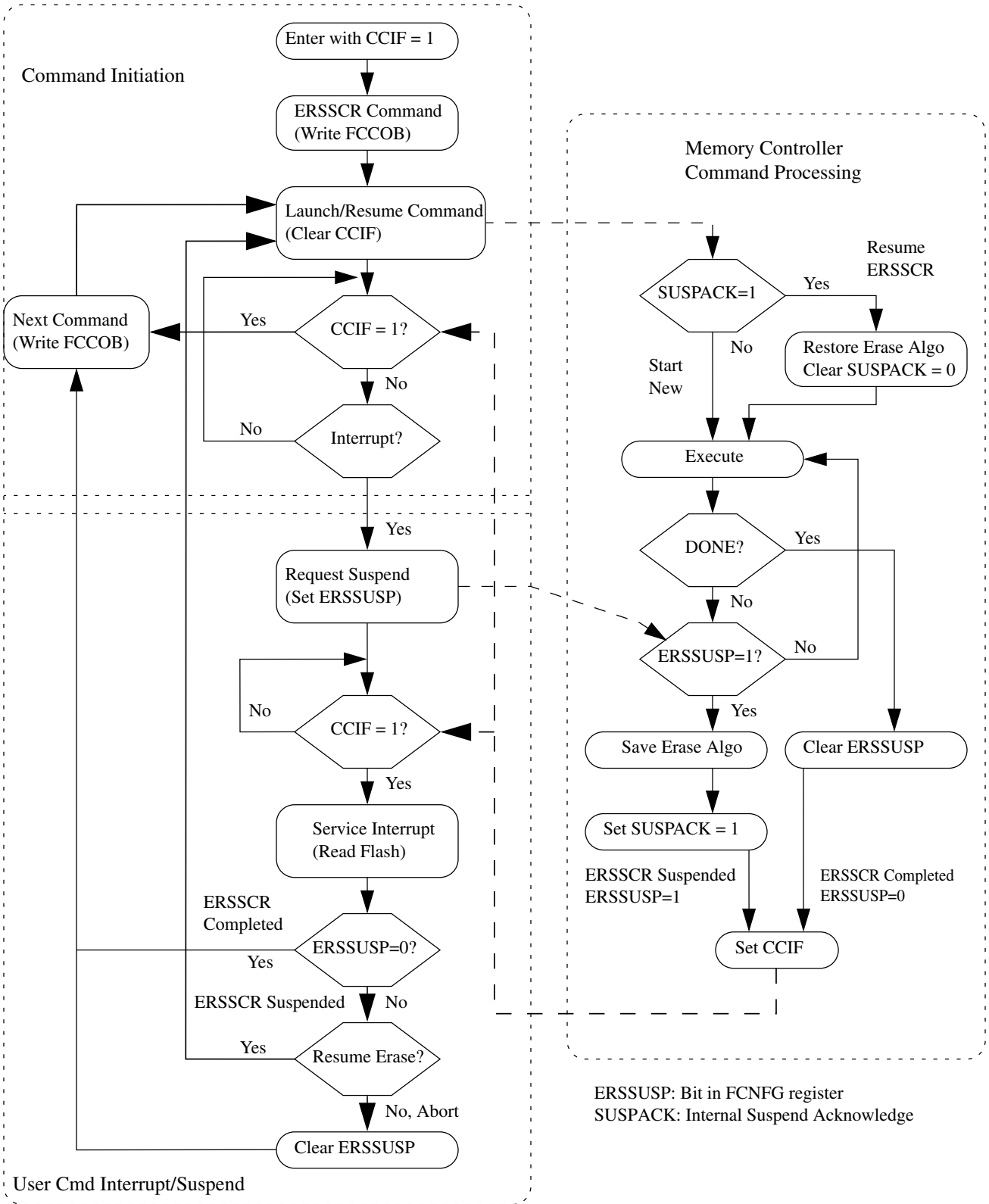

Figure 24-26. Suspend and Resume of Erase Flash Sector Operation

24.4.10.6 Read 1s All Blocks Command

The Read 1s All Blocks command checks if the program flash blocks have been erased to the specified read margin level, if applicable, and releases security if the readout passes, i.e. all data reads as '1'.

Table 24-39. Read 1s All Blocks Command FCCOB Requirements

FCCOB Number	FCCOB Contents [7:0]
0	0x40 (RD1ALL)
1	Read-1 Margin Choice

After clearing CCIF to launch the Read 1s All Blocks command, the flash memory module :

- sets the read margin for 1s according to Table 24-40,
- checks the contents of the program flash are in the erased state.

If the flash memory module confirms that these memory resources are erased, security is released by setting the FSEC[SEC] field to the unsecure state. The security byte in the flash configuration field (see Flash Configuration Field Description) remains unaffected by the Read 1s All Blocks command. If the read fails, i.e. all memory resources are not in the fully erased state, the FSTAT[MGSTAT0] bit is set.

The CCIF flag sets after the Read 1s All Blocks operation has completed.

Table 24-40. Margin Level Choices for Read 1s All Blocks

Read Margin Choice	Margin Level Description
0x00	Use the 'normal' read level for 1s
0x01	Apply the 'User' margin to the normal read-1 level
0x02	Apply the 'Factory' margin to the normal read-1 level

Table 24-41. Read 1s All Blocks Command Error Handling

Error Condition	Error Bit
An invalid margin choice is specified	FSTAT[ACCERR]
Read-1s fails	FSTAT[MGSTAT0]

24.4.10.7 Read Once Command

The Read Once command provides read access to a reserved 64-byte field located in the program flash 0 IFR (see Program Flash IFR Map and Program Once Field). Access to the Program Once field is via 16 records, each 4 bytes long. The Program Once field is programmed using the Program Once command described in Program Once Command.

Table 24-42. Read Once Command FCCOB Requirements

FCCOB Number	FCCOB Contents [7:0]
0	0x41 (RDONCE)
1	Program Once record index (0x00 - 0x0F)
2	Not used
3	Not used
Returned Values	
4	Program Once byte 0 value
5	Program Once byte 1 value
6	Program Once byte 2 value
7	Program Once byte 3 value

After clearing CCIF to launch the Read Once command, a 4-byte Program Once record is read from the program flash IFR and stored in the FCCOB register. The CCIF flag is set after the Read Once operation completes. Valid record index values for the Read Once command range from 0x00 to 0x0F. During execution of the Read Once command, any attempt to read addresses within the program flash block containing this 64-byte field returns invalid data. The Read Once command can be executed any number of times.

Table 24-43. Read Once Command Error Handling

Error Condition	Error Bit
Command not available in current mode/security	FSTAT[ACCERR]
An invalid record index is supplied	FSTAT[ACCERR]

24.4.10.8 Program Once Command

The Program Once command enables programming to a reserved 64-byte field in the program flash 0 IFR (see Program Flash IFR Map and Program Once Field). Access to the Program Once field is via 16 records, each 4 bytes long. The Program Once field can be read using the Read Once command (see Read Once Command) or using the Read Resource command (see Read Resource Command). Each Program Once record can be programmed only once since the program flash 0 IFR cannot be erased.

Table 24-44. Program Once Command FCCOB Requirements

FCCOB Number	FCCOB Contents [7:0]
0	0x43 (PGMONCE)
1	Program Once record index (0x00 - 0x0F)
2	Not Used
3	Not Used
4	Program Once Byte 0 value
5	Program Once Byte 1 value
6	Program Once Byte 2 value
7	Program Once Byte 3 value

After clearing CCIF to launch the Program Once command, the flash memory module first verifies that the selected record is erased. If erased, then the selected record is programmed using the values provided. The Program Once command also verifies that the programmed values read back correctly. The CCIF flag is set after the Program Once operation has completed.

The reserved program flash 0 IFR location accessed by the Program Once command cannot be erased and any attempt to program one of these records when the existing value is not Fs (erased) is not allowed. Valid record index values for the Program Once command range from 0x00 to 0x0F. During execution of the Program Once command, any attempt to read addresses within the program flash block containing this 64-byte field returns invalid data.

Table 24-45. Program Once Command Error Handling

Error Condition	Error Bit
Command not available in current mode/security	FSTAT[ACCERR]
An invalid record index is supplied	FSTAT[ACCERR]
The requested record has already been programmed to a non-FFFF value[1]	FSTAT[ACCERR]
Any errors have been encountered during the verify operation	FSTAT[MGSTAT0]

1. If a Program Once record is initially programmed to 0xFFFF_FFFF, the Program Once command is allowed to execute again on that same record.

24.4.10.9 Erase All Blocks Command

The Erase All Blocks operation erases all flash memory, verifies all memory contents, and releases MCU security.

Table 24-46. Erase All Blocks Command FCCOB Requirements

FCCOB Number	FCCOB Contents [7:0]
0	0x44 (ERSALL)

After clearing CCIF to launch the Erase All Blocks command, the flash memory module erases all program flash memory, then verifies that all are erased.

If the flash memory module verifies that all flash memories were properly erased, security is released by setting the FSEC[SEC] field to the unsecure state. The Erase All Blocks command aborts if any flash region is protected. The security byte and all other contents of the flash configuration field (see Flash Configuration Field Description) are erased by the Erase All Blocks command. If the erase-verify fails, the FSTAT[MGSTAT0] bit is set. The CCIF flag is set after the Erase All Blocks operation completes.

Table 24-47. Erase All Blocks Command Error Handling

Error Condition	Error Bit
Command not available in current mode/security	FSTAT[ACCERR]
Any region of the program flash memory is protected	FSTAT[FPVIOL]
Any errors have been encountered during the verify operation[1]	FSTAT[MGSTAT0]

1. User margin read may be run using the Read 1s All Blocks command to verify all bits are erased.

24.4.10.9.1 Triggering an Erase All External to the Flash Memory Module

The functionality of the Erase All Blocks command is also available in an uncommanded fashion outside of the flash memory. Refer to the device's Chip Configuration details for information on this functionality.

Before invoking the external erase all function, the FSTAT[ACCERR and PVIOL] flags must be cleared and the FCCOB0 register must not contain 0x44. When invoked, the erase-all function erases all program flash memory regardless of the protection settings. If the post-erase verify passes, the routine then releases security by setting the FSEC[SEC] field register to the unsecure state. The security byte in the Flash Configuration Field is also programmed to the unsecure state. The status of the erase-all request is reflected in the FCNFG[ERSAREQ] bit. The FCNFG[ERSAREQ] bit is cleared once the operation completes and the normal FSTAT error reporting is available as described in Erase All Blocks Command.

24.4.10.10 Verify Backdoor Access Key Command

The Verify Backdoor Access Key command only executes if the mode and security conditions are satisfied (see Flash Commands by Mode). Execution of the Verify Backdoor Access Key command is further qualified by the FSEC[KEYEN] bits. The Verify Backdoor Access Key command releases security if user-supplied keys in the FCCOB match those stored in the Backdoor Comparison Key bytes of the Flash Configuration Field (see Flash Configuration Field Description). The column labelled Flash Configuration Field offset address shows the location of the matching byte in the Flash Configuration Field.

Table 24-48. Verify Backdoor Access Key Command FCCOB Requirements

FCCOB Number	FCCOB Contents [7:0]	Flash Configuration Field Offset Address
0	0x45 (VFYKEY)	
1-3	Not Used	
4	Key Byte 0	0x0_0000
5	Key Byte 1	0x0_0001
6	Key Byte 2	0x0_0002
7	Key Byte 3	0x0_0003
8	Key Byte 4	0x0_0004
9	Key Byte 5	0x0_0005
A	Key Byte 6	0x0_0006
B	Key Byte 7	0x0_0007

After clearing CCIF to launch the Verify Backdoor Access Key command, the flash memory module checks the FSEC[KEYEN] bits to verify that this command is enabled. If not enabled, the flash memory module sets the FSTAT[ACCERR] bit and terminates. If the command is enabled, the flash memory module compares the key provided in FCCOB to the backdoor comparison key in the Flash Configuration Field. If the backdoor keys match, the FSEC[SEC] field is changed to the unsecure state and security is released. If the backdoor keys do not match, security is not released and all future attempts to execute the Verify Backdoor Access Key command are immediately aborted and the FSTAT[ACCERR] bit is (again) set to 1 until a reset of the flash memory module module occurs. If the entire 8-byte key is all zeros or all ones, the Verify Backdoor Access Key command fails with an access error. The CCIF flag is set after the Verify Backdoor Access Key operation completes.

Table 24-49. Verify Backdoor Access Key Command Error Handling

Error Condition	Error Bit
The supplied key is all-0s or all-Fs	FSTAT[ACCERR]
An incorrect backdoor key is supplied	FSTAT[ACCERR]

Table continues on the next page...

Table 24-49. Verify Backdoor Access Key Command Error Handling (continued)

Error Condition	Error Bit
Backdoor key access has not been enabled (see the description of the FSEC register)	FSTAT[ACCERR]
This command is launched and the backdoor key has mismatched since the last power down reset	FSTAT[ACCERR]

24.4.11 Security

The flash memory module provides security information to the MCU based on contents of the FSEC security register. The MCU then limits access to flash memory resources as defined in the device's Chip Configuration details. During reset, the flash memory module initializes the FSEC register using data read from the security byte of the Flash Configuration Field (see Flash Configuration Field Description).

The following fields are available in the FSEC register. The settings are described in the Flash Security Register (FTFA_FSEC) details.

Table 24-50. FSEC register fields

FSEC field	Description
KEYEN	Backdoor Key Access
MEEN	Mass Erase Capability
FSLACC	Freescale Factory Access
SEC	MCU security

24.4.11.1 Flash Memory Access by Mode and Security

The following table summarizes how access to the flash memory module is affected by security and operating mode.

Table 24-51. Flash Memory Access Summary

Operating Mode	Chip Security State	
	Unsecure	Secure
NVM Normal	Full command set	
NVM Special	Full command set	Only the Erase All Blocks and Read 1s All Blocks commands.

24.4.11.2 Changing the Security State

The security state out of reset can be permanently changed by programming the security byte of the flash configuration field. This assumes that you are starting from a mode where the necessary program flash erase and program commands are available and that the region of the program flash containing the flash configuration field is unprotected. If the flash security byte is successfully programmed, its new value takes affect after the next chip reset.

24.4.11.2.1 Unsecuring the Chip Using Backdoor Key Access

The chip can be unsecured by using the backdoor key access feature, which requires knowledge of the contents of the 8-byte backdoor key value stored in the Flash Configuration Field (see Flash Configuration Field Description). If the FSEC[KEYEN] bits are in the enabled state, the Verify Backdoor Access Key command (see Verify Backdoor Access Key Command) can be run; it allows the user to present prospective keys for comparison to the stored keys. If the keys match, the FSEC[SEC] bits are changed to unsecure the chip. The entire 8-byte key cannot be all 0s or all 1s; that is, 0000_0000_0000_0000h and FFFF_FFFF_FFFF_FFFFh are not accepted by the Verify Backdoor Access Key command as valid comparison values. While the Verify Backdoor Access Key command is active, program flash memory is not available for read access and returns invalid data.

The user code stored in the program flash memory must have a method of receiving the backdoor keys from an external stimulus. This external stimulus would typically be through one of the on-chip serial ports.

If the KEYEN bits are in the enabled state, the chip can be unsecured by the following backdoor key access sequence:

1. Follow the command sequence for the Verify Backdoor Access Key command as explained in Verify Backdoor Access Key Command
2. If the Verify Backdoor Access Key command is successful, the chip is unsecured and the FSEC[SEC] bits are forced to the unsecure state

An illegal key provided to the Verify Backdoor Access Key command prohibits further use of the Verify Backdoor Access Key command. A reset of the chip is the only method to re-enable the Verify Backdoor Access Key command when a comparison fails.

After the backdoor keys have been correctly matched, the chip is unsecured by changing the FSEC[SEC] bits. A successful execution of the Verify Backdoor Access Key command changes the security in the FSEC register only. It does not alter the security byte or the keys stored in the Flash Configuration Field (Flash Configuration Field Description). After the next reset of the chip, the security state of the flash memory

module reverts back to the flash security byte in the Flash Configuration Field. The Verify Backdoor Access Key command sequence has no effect on the program and erase protections defined in the program flash protection registers.

If the backdoor keys successfully match, the unsecured chip has full control of the contents of the Flash Configuration Field. The chip may erase the sector containing the Flash Configuration Field and reprogram the flash security byte to the unsecure state and change the backdoor keys to any desired value.

24.4.12 Reset Sequence

On each system reset the flash memory module executes a sequence which establishes initial values for the flash block configuration parameters, FPROT, FOPT, and FSEC registers.

FSTAT[CCIF] is cleared throughout the reset sequence. The flash memory module holds off CPU access during the reset sequence. Flash reads are possible when the hold is removed. Completion of the reset sequence is marked by setting CCIF which enables flash user commands.

If a reset occurs while any flash command is in progress, that command is immediately aborted. The state of the word being programmed or the sector/block being erased is not guaranteed. Commands and operations do not automatically resume after exiting reset.

Chapter 25
Analog-to-Digital Converter (ADC)

25.1 Introduction

NOTE

For the chip-specific implementation details of this module's instances, see the chip configuration information.

The 12-bit analog-to-digital converter (ADC) is a successive approximation ADC designed for operation within an integrated microcontroller system-on-chip.

NOTE

For the chip specific modes of operation, see the power management information of the device.

25.1.1 Features

Following are the features of the ADC module.

- Linear successive approximation algorithm with up to 12-bit resolution
- Up to 24 single-ended external analog inputs
- Output modes:
  - single-ended 12-bit, 10-bit, and 8-bit modes
- Output in right-justified unsigned format for single-ended
- Single or continuous conversion, that is, automatic return to idle after single conversion
- Configurable sample time and conversion speed/power
- Conversion complete/hardware average complete flag and interrupt

- Input clock selectable from up to four sources
- Operation in low-power modes for lower noise
- Asynchronous clock source for lower noise operation with option to output the clock
- Selectable hardware conversion trigger with hardware channel select
- Automatic compare with interrupt for less-than, greater-than or equal-to, within range, or out-of-range, programmable value
- Temperature sensor
- Hardware average function
- Selectable voltage reference: external or alternate
- Self-Calibration mode

25.1.2 Block diagram

The following figure is the ADC module block diagram.

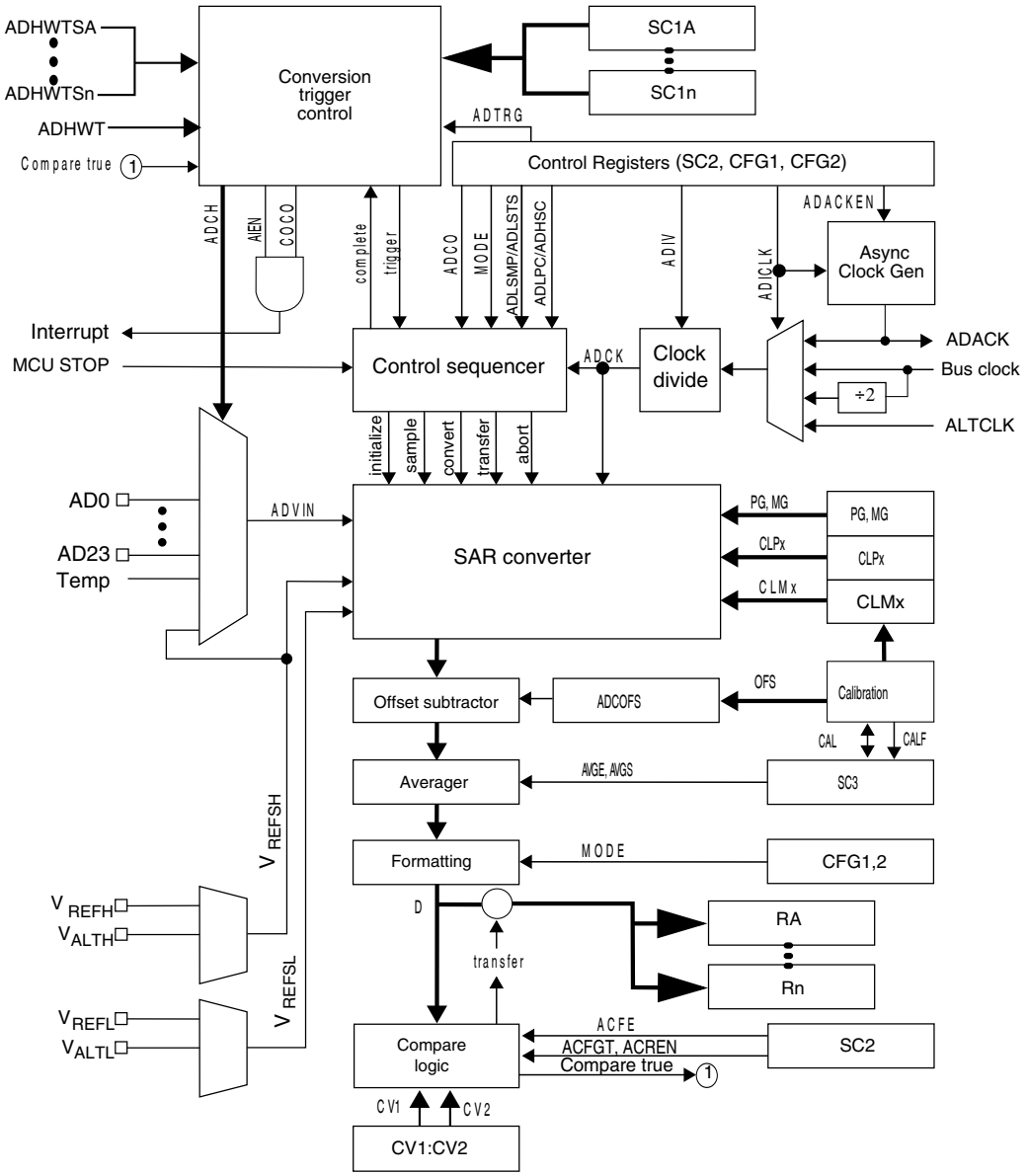

Figure 25-1. ADC block diagram

25.2 ADC signal descriptions

The ADC module supports up to 24 single-ended inputs. The ADC also requires four supply/reference/ground connections.

NOTE

Refer to ADC configuration section in chip configuration chapter for the number of channels supported on this device.

Table 25-1. ADC signal descriptions

Signal	Description	I/O
AD*n*	Single-Ended Analog Channel Inputs	I
V_{DDA}	Analog Power Supply	I
V_{SSA}	Analog Ground	I

25.2.1 Analog Power (V_{DDA})

The ADC analog portion uses V_{DDA} as its power connection. In some packages, V_{DDA} is connected internally to V_{DD}. If externally available, connect the V_{DDA} pin to the same voltage potential as V_{DD}. External filtering may be necessary to ensure clean V_{DDA} for good results.

25.2.2 Analog Ground (V_{SSA})

The ADC analog portion uses V_{SSA} as its ground connection. In some packages, V_{SSA} is connected internally to V_{SS}. If externally available, connect the V_{SSA} pin to the same voltage potential as V_{SS}.

25.2.3 Analog Channel Inputs (ADx)

The ADC module supports up to 24 single-ended analog inputs. A single-ended input is selected for conversion through the SC1[ADCH] channel select bits.

25.3 Memory map and register definitions

This section describes the ADC registers.

ADC memory map

Absolute address (hex)	Register name	Width (in bits)	Access	Reset value	Section/ page
4003_B000	ADC Status and Control Registers 1 (ADC0_SC1A)	32	R/W	0000_001Fh	25.3.1/345
4003_B004	ADC Status and Control Registers 1 (ADC0_SC1B)	32	R/W	0000_001Fh	25.3.1/345
4003_B008	ADC Configuration Register 1 (ADC0_CFG1)	32	R/W	0000_0000h	25.3.2/349
4003_B00C	ADC Configuration Register 2 (ADC0_CFG2)	32	R/W	0000_0000h	25.3.3/350

Table continues on the next page...

ADC memory map (continued)

Absolute address (hex)	Register name	Width (in bits)	Access	Reset value	Section/ page
4003_B010	ADC Data Result Register (ADC0_RA)	32	R	0000_0000h	25.3.4/351
4003_B014	ADC Data Result Register (ADC0_RB)	32	R	0000_0000h	25.3.4/351
4003_B018	Compare Value Registers (ADC0_CV1)	32	R/W	0000_0000h	25.3.5/352
4003_B01C	Compare Value Registers (ADC0_CV2)	32	R/W	0000_0000h	25.3.5/352
4003_B020	Status and Control Register 2 (ADC0_SC2)	32	R/W	0000_0000h	25.3.6/353
4003_B024	Status and Control Register 3 (ADC0_SC3)	32	R/W	0000_0000h	25.3.7/355
4003_B028	ADC Offset Correction Register (ADC0_OFS)	32	R/W	0000_0004h	25.3.8/357
4003_B02C	ADC Plus-Side Gain Register (ADC0_PG)	32	R/W	0000_8200h	25.3.9/357
4003_B034	ADC Plus-Side General Calibration Value Register (ADC0_CLPD)	32	R/W	0000_000Ah	25.3.10/358
4003_B038	ADC Plus-Side General Calibration Value Register (ADC0_CLPS)	32	R/W	0000_0020h	25.3.11/358
4003_B03C	ADC Plus-Side General Calibration Value Register (ADC0_CLP4)	32	R/W	0000_0200h	25.3.12/359
4003_B040	ADC Plus-Side General Calibration Value Register (ADC0_CLP3)	32	R/W	0000_0100h	25.3.13/359
4003_B044	ADC Plus-Side General Calibration Value Register (ADC0_CLP2)	32	R/W	0000_0080h	25.3.14/360
4003_B048	ADC Plus-Side General Calibration Value Register (ADC0_CLP1)	32	R/W	0000_0040h	25.3.15/360
4003_B04C	ADC Plus-Side General Calibration Value Register (ADC0_CLP0)	32	R/W	0000_0020h	25.3.16/361

25.3.1 ADC Status and Control Registers 1 (ADC*x*_SC1*n*)

SC1A is used for both software and hardware trigger modes of operation.

To allow sequential conversions of the ADC to be triggered by internal peripherals, the ADC can have more than one status and control register: one for each conversion. The SC1B–SC1n registers indicate potentially multiple SC1 registers for use only in hardware trigger mode. See the chip configuration information about the number of SC1n registers specific to this device. The SC1n registers have identical fields, and are used in a "ping-pong" approach to control ADC operation.

At any one point in time, only one of the SC1n registers is actively controlling ADC conversions. Updating SC1A while SC1n is actively controlling a conversion is allowed, and vice-versa for any of the SC1n registers specific to this MCU.

Writing SC1A while SC1A is actively controlling a conversion aborts the current conversion. In Software Trigger mode, when SC2[ADTRG]=0, writes to SC1A subsequently initiate a new conversion, if SC1[ADCH] contains a value other than all 1s.

Writing any of the SC1n registers while that specific SC1n register is actively controlling a conversion aborts the current conversion. None of the SC1B-SC1n registers are used for software trigger operation and therefore writes to the SC1B–SC1n registers do not initiate a new conversion.

Address: 4003_B000h base + 0h offset + (4d × i), where i=0d to 1d

Bit	31	30	29	28	27	26	25	24	23	22	21	20	19	18	17	16
R	0															
W																
Reset	0	0	0	0	0	0	0	0	0	0	0	0	0	0	0	0

Bit	15	14	13	12	11	10	9	8	7	6	5	4	3	2	1	0
R	0								COCO	AIEN	Reserved	ADCH				
W																
Reset	0	0	0	0	0	0	0	0	0	0	0	1	1	1	1	1

ADCx_SC1*n* field descriptions

Field	Description
31–8 Reserved	This field is reserved. This read-only field is reserved and always has the value 0.
7 COCO	Conversion Complete Flag This is a read-only field that is set each time a conversion is completed when the compare function is disabled, or SC2[ACFE]=0 and the hardware average function is disabled, or SC3[AVGE]=0. When the compare function is enabled, or SC2[ACFE]=1, COCO is set upon completion of a conversion only if the compare result is true. When the hardware average function is enabled, or SC3[AVGE]=1, COCO is set upon completion of the selected number of conversions (determined by AVGS). COCO in SC1A is also set at the completion of a calibration sequence. COCO is cleared when the respective SC1n register is written or when the respective Rn register is read. 0 Conversion is not completed. 1 Conversion is completed.
6 AIEN	Interrupt Enable Enables conversion complete interrupts. When COCO becomes set while the respective AIEN is high, an interrupt is asserted. 0 Conversion complete interrupt is disabled. 1 Conversion complete interrupt is enabled.

Table continues on the next page...

ADCx_SC1*n* field descriptions (continued)

Field	Description
5 Reserved	This field is reserved. This reserved bit should not be changed.
ADCH	Input channel select Selects one of the input channels. **NOTE:** Some of the input channel options in the bitfield-setting descriptions might not be available for your device. For the actual ADC channel assignments for your device, see the Chip Configuration details. The successive approximation converter subsystem is turned off when the channel select bits are all set, that is, ADCH = 11111. This feature allows explicit disabling of the ADC and isolation of the input channel from all sources. Terminating continuous conversions this way prevents an additional single conversion from being performed. It is not necessary to set ADCH to all 1s to place the ADC in a low-power state when continuous conversions are not enabled because the module automatically enters a low-power state when a conversion completes. 00000 AD0 is selected as input. 00001 AD1 is selected as input. 00010 AD2 is selected as input. 00011 AD3 is selected as input. 00100 AD4 is selected as input. 00101 AD5 is selected as input. 00110 AD6 is selected as input. 00111 AD7 is selected as input. 01000 AD8 is selected as input. 01001 AD9 is selected as input. 01010 AD10 is selected as input. 01011 AD11 is selected as input. 01100 AD12 is selected as input. 01101 AD13 is selected as input. 01110 AD14 is selected as input. 01111 AD15 is selected as input. 10000 AD16 is selected as input. 10001 AD17 is selected as input. 10010 AD18 is selected as input. 10011 AD19 is selected as input. 10100 AD20 is selected as input. 10101 AD21 is selected as input. 10110 AD22 is selected as input. 10111 AD23 is selected as input. 11000 Reserved. 11001 Reserved. 11010 Temp Sensor (single-ended) is selected as input. 11011 Bandgap (single-ended) is selected as input. 11100 Reserved. 11101 V_{REFSH} is selected as input. Voltage reference selected is determined by SC2[REFSEL]. 11110 V_{REFSL} is selected as input. Voltage reference selected is determined by SC2[REFSEL]. 11111 Module is disabled.

25.3.2 ADC Configuration Register 1 (ADCx_CFG1)

The configuration Register 1 (CFG1) selects the mode of operation, clock source, clock divide, and configuration for low power or long sample time.

Address: 4003_B000h base + 8h offset = 4003_B008h

Bit	31	30	29	28	27	26	25	24	23	22	21	20	19	18	17	16
R	0															
W																
Reset	0	0	0	0	0	0	0	0	0	0	0	0	0	0	0	0

Bit	15	14	13	12	11	10	9	8	7	6	5	4	3	2	1	0
R	0								ADLPC	ADIV		ADLSMP	MODE		ADICLK	
W																
Reset	0	0	0	0	0	0	0	0	0	0	0	0	0	0	0	0

ADCx_CFG1 field descriptions

Field	Description
31–8 Reserved	This field is reserved. This read-only field is reserved and always has the value 0.
7 ADLPC	Low-Power Configuration Controls the power configuration of the successive approximation converter. This optimizes power consumption when higher sample rates are not required. 0 Normal power configuration. 1 Low-power configuration. The power is reduced at the expense of maximum clock speed.
6–5 ADIV	Clock Divide Select Selects the divide ratio used by the ADC to generate the internal clock ADCK. 00 The divide ratio is 1 and the clock rate is input clock. 01 The divide ratio is 2 and the clock rate is (input clock)/2. 10 The divide ratio is 4 and the clock rate is (input clock)/4. 11 The divide ratio is 8 and the clock rate is (input clock)/8.
4 ADLSMP	Sample Time Configuration Selects between different sample times based on the conversion mode selected. This field adjusts the sample period to allow higher impedance inputs to be accurately sampled or to maximize conversion speed for lower impedance inputs. Longer sample times can also be used to lower overall power consumption if continuous conversions are enabled and high conversion rates are not required. When ADLSMP=1, the long sample time select bits, (ADLSTS[1:0]), can select the extent of the long sample time.

Table continues on the next page...

ADCx_CFG1 field descriptions (continued)

Field	Description
	0 Short sample time. 1 Long sample time.
3–2 MODE	Conversion mode selection Selects the ADC resolution mode. 00 It is single-ended 8-bit conversion. 01 It is single-ended 12-bit conversion . 10 It is single-ended 10-bit conversion. 11 Reserved. Do not set the field to this value.
ADICLK	Input Clock Select Selects the input clock source to generate the internal clock, ADCK. Note that when the ADACK clock source is selected, it is not required to be active prior to conversion start. When it is selected and it is not active prior to a conversion start, when CFG2[ADACKEN]=0, the asynchronous clock is activated at the start of a conversion and deactivated when conversions are terminated. In this case, there is an associated clock startup delay each time the clock source is re-activated. 00 Bus clock 01 (Bus clock)/2 10 Alternate clock (ALTCLK) 11 Asynchronous clock (ADACK)

25.3.3 ADC Configuration Register 2 (ADCx_CFG2)

Configuration Register 2 (CFG2) selects the special high-speed configuration for very high speed conversions and selects the long sample time duration during long sample mode.

Address: 4003_B000h base + Ch offset = 4003_B00Ch

Bit	31	30	29	28	27	26	25	24	23	22	21	20	19	18	17	16
R	0															
W																
Reset	0	0	0	0	0	0	0	0	0	0	0	0	0	0	0	0

Bit	15	14	13	12	11	10	9	8	7	6	5	4	3	2	1	0
R	0								0			MUXSEL	ADACKEN	ADHSC	ADLSTS	
W																
Reset	0	0	0	0	0	0	0	0	0	0	0	0	0	0	0	0

ADCx_CFG2 field descriptions

Field	Description
31–8 Reserved	This field is reserved. This read-only field is reserved and always has the value 0.
7–5 Reserved	This field is reserved. This read-only field is reserved and always has the value 0.
4 MUXSEL	ADC Mux Select Changes the ADC mux setting to select between alternate sets of ADC channels. 0 ADxxa channels are selected. 1 ADxxb channels are selected.
3 ADACKEN	Asynchronous Clock Output Enable Enables the asynchronous clock source and the clock source output regardless of the conversion and status of CFG1[ADICLK]. Based on MCU configuration, the asynchronous clock may be used by other modules. See chip configuration information. Setting this field allows the clock to be used even while the ADC is idle or operating from a different clock source. Also, latency of initiating a single or first-continuous conversion with the asynchronous clock selected is reduced because the ADACK clock is already operational. 0 Asynchronous clock output disabled; Asynchronous clock is enabled only if selected by ADICLK and a conversion is active. 1 Asynchronous clock and clock output is enabled regardless of the state of the ADC.
2 ADHSC	High-Speed Configuration Configures the ADC for very high-speed operation. The conversion sequence is altered with 2 ADCK cycles added to the conversion time to allow higher speed conversion clocks. 0 Normal conversion sequence selected. 1 High-speed conversion sequence selected with 2 additional ADCK cycles to total conversion time.
ADLSTS	Long Sample Time Select Selects between the extended sample times when long sample time is selected, that is, when CFG1[ADLSMP]=1. This allows higher impedance inputs to be accurately sampled or to maximize conversion speed for lower impedance inputs. Longer sample times can also be used to lower overall power consumption when continuous conversions are enabled if high conversion rates are not required. 00 Default longest sample time; 20 extra ADCK cycles; 24 ADCK cycles total. 01 12 extra ADCK cycles; 16 ADCK cycles total sample time. 10 6 extra ADCK cycles; 10 ADCK cycles total sample time. 11 2 extra ADCK cycles; 6 ADCK cycles total sample time.

25.3.4 ADC Data Result Register (ADCx_R*n*)

The data result registers (Rn) contain the result of an ADC conversion of the channel selected by the corresponding status and channel control register (SC1A:SC1n). For every status and channel control register, there is a corresponding data result register.

Unused bits in R n are cleared in unsigned right-aligned modes and carry the sign bit (MSB) in sign-extended 2's complement modes.

The following table describes the behavior of the data result registers in the different modes of operation.

Table 25-37. Data result register description

Conversion mode	D15	D14	D13	D12	D11	D10	D9	D8	D7	D6	D5	D4	D3	D2	D1	D0	Format
12-bit single-ended	0	0	0	0	D	D	D	D	D	D	D	D	D	D	D	D	Unsigned right-justified
10-bit single-ended	0	0	0	0	0	0	D	D	D	D	D	D	D	D	D	D	Unsigned right-justified
8-bit single-ended	0	0	0	0	0	0	0	0	D	D	D	D	D	D	D	D	Unsigned right-justified

NOTE

S: Sign bit or sign bit extension;

D: Data, which is 2's complement data if indicated

Address: 4003_B000h base + 10h offset + (4d × i), where i=0d to 1d

Bit	31	30	29	28	27	26	25	24	23	22	21	20	19	18	17	16	15	14	13	12	11	10	9	8	7	6	5	4	3	2	1	0
R	0																D															
W																																
Reset	0	0	0	0	0	0	0	0	0	0	0	0	0	0	0	0	0	0	0	0	0	0	0	0	0	0	0	0	0	0	0	0

ADCx_R*n* field descriptions

Field	Description
31–16 Reserved	This field is reserved. This read-only field is reserved and always has the value 0.
D	Data result

25.3.5 Compare Value Registers (ADCx_CV*n*)

The Compare Value Registers (CV1 and CV2) contain a compare value used to compare the conversion result when the compare function is enabled, that is, SC2[ACFE]=1. This register is formatted in the same way as the Rn registers in different modes of operation for both bit position definition and value format using unsigned or sign-extended 2's complement. Therefore, the compare function uses only the CVn fields that are related to the ADC mode of operation.

The compare value 2 register (CV2) is used only when the compare range function is enabled, that is, SC2[ACREN]=1.

Address: 4003_B000h base + 18h offset + (4d × i), where i=0d to 1d

Bit	31	30	29	28	27	26	25	24	23	22	21	20	19	18	17	16	15	14	13	12	11	10	9	8	7	6	5	4	3	2	1	0
R	0																CV															
W																																
Reset	0	0	0	0	0	0	0	0	0	0	0	0	0	0	0	0	0	0	0	0	0	0	0	0	0	0	0	0	0	0	0	0

ADCx_CV*n* field descriptions

Field	Description
31–16 Reserved	This field is reserved. This read-only field is reserved and always has the value 0.
CV	Compare Value.

25.3.6 Status and Control Register 2 (ADCx_SC2)

The status and control register 2 (SC2) contains the conversion active, hardware/software trigger select, compare function, and voltage reference select of the ADC module.

Address: 4003_B000h base + 20h offset = 4003_B020h

Bit	31	30	29	28	27	26	25	24	23	22	21	20	19	18	17	16
R	0															
W																
Reset	0	0	0	0	0	0	0	0	0	0	0	0	0	0	0	0

Bit	15	14	13	12	11	10	9	8	7	6	5	4	3	2	1	0
R	0								ADACT	ADTRG	ACFE	ACFGT	ACREN	0	REFSEL	
W																
Reset	0	0	0	0	0	0	0	0	0	0	0	0	0	0	0	0

ADCx_SC2 field descriptions

Field	Description
31–8 Reserved	This field is reserved. This read-only field is reserved and always has the value 0.
7 ADACT	Conversion Active Indicates that a conversion or hardware averaging is in progress. ADACT is set when a conversion is initiated and cleared when a conversion is completed or aborted. 0 Conversion not in progress. 1 Conversion in progress.
6 ADTRG	Conversion Trigger Select Selects the type of trigger used for initiating a conversion. Two types of trigger are selectable: • Software trigger: When software trigger is selected, a conversion is initiated following a write to SC1A. • Hardware trigger: When hardware trigger is selected, a conversion is initiated following the assertion of the ADHWT input after a pulse of the ADHWTSn input. 0 Software trigger selected. 1 Hardware trigger selected.
5 ACFE	Compare Function Enable Enables the compare function. 0 Compare function disabled. 1 Compare function enabled.
4 ACFGT	Compare Function Greater Than Enable Configures the compare function to check the conversion result relative to the CV1 and CV2 based upon the value of ACREN. ACFE must be set for ACFGT to have any effect. 0 Configures less than threshold, outside range not inclusive and inside range not inclusive; functionality based on the values placed in CV1 and CV2. 1 Configures greater than or equal to threshold, outside and inside ranges inclusive; functionality based on the values placed in CV1 and CV2.
3 ACREN	Compare Function Range Enable Configures the compare function to check if the conversion result of the input being monitored is either between or outside the range formed by CV1 and CV2 determined by the value of ACFGT. ACFE must be set for ACFGT to have any effect. 0 Range function disabled. Only CV1 is compared. 1 Range function enabled. Both CV1 and CV2 are compared.
2 Reserved	This field is reserved. This read-only field is reserved and always has the value 0.
REFSEL	Voltage Reference Selection Selects the voltage reference source used for conversions. 00 Default voltage reference pin pair, that is, external pins V_{REFH} and V_{REFL} 01 Alternate reference pair, that is, V_{ALTH} and V_{ALTL} . This pair may be additional external pins or internal sources depending on the MCU configuration. See the chip configuration information for details specific to this MCU

Table continues on the next page...

ADCx_SC2 field descriptions (continued)

Field	Description
	10 Reserved 11 Reserved

25.3.7 Status and Control Register 3 (ADCx_SC3)

The Status and Control Register 3 (SC3) controls the calibration, continuous convert, and hardware averaging functions of the ADC module.

Address: 4003_B000h base + 24h offset = 4003_B024h

Bit	31	30	29	28	27	26	25	24	23	22	21	20	19	18	17	16
R	0															
W																
Reset	0	0	0	0	0	0	0	0	0	0	0	0	0	0	0	0

Bit	15	14	13	12	11	10	9	8	7	6	5	4	3	2	1	0
R	0								CAL	CALF	0		ADCO	AVGE	AVGS	
W																
Reset	0	0	0	0	0	0	0	0	0	0	0	0	0	0	0	0

ADCx_SC3 field descriptions

Field	Description
31–8 Reserved	This field is reserved. This read-only field is reserved and always has the value 0.
7 CAL	Calibration Begins the calibration sequence when set. This field stays set while the calibration is in progress and is cleared when the calibration sequence is completed. CALF must be checked to determine the result of the

Table continues on the next page...

ADCx_SC3 field descriptions (continued)

Field	Description
	calibration sequence. Once started, the calibration routine cannot be interrupted by writes to the ADC registers or the results will be invalid and CALF will set. Setting CAL will abort any current conversion.
6 CALF	Calibration Failed Flag Displays the result of the calibration sequence. The calibration sequence will fail if SC2[ADTRG] = 1, any ADC register is written, or any stop mode is entered before the calibration sequence completes. Writing 1 to CALF clears it. 0 Calibration completed normally. 1 Calibration failed. ADC accuracy specifications are not guaranteed.
5–4 Reserved	This field is reserved. This read-only field is reserved and always has the value 0.
3 ADCO	Continuous Conversion Enable Enables continuous conversions. 0 One conversion or one set of conversions if the hardware average function is enabled, that is, AVGE=1, after initiating a conversion. 1 Continuous conversions or sets of conversions if the hardware average function is enabled, that is, AVGE=1, after initiating a conversion.
2 AVGE	Hardware Average Enable Enables the hardware average function of the ADC. 0 Hardware average function disabled. 1 Hardware average function enabled.
AVGS	Hardware Average Select Determines how many ADC conversions will be averaged to create the ADC average result. 00 4 samples averaged. 01 8 samples averaged. 10 16 samples averaged. 11 32 samples averaged.

25.3.8 ADC Offset Correction Register (ADCx_OFS)

The ADC Offset Correction Register (OFS) contains the user-selected or calibration-generated offset error correction value. This register is a 2's complement, left-justified, 16-bit value . The value in OFS is subtracted from the conversion and the result is transferred into the result registers, Rn. If the result is greater than the maximum or less than the minimum result value, it is forced to the appropriate limit for the current mode of operation.

Address: 4003_B000h base + 28h offset = 4003_B028h

Bit	31	30	29	28	27	26	25	24	23	22	21	20	19	18	17	16	15	14	13	12	11	10	9	8	7	6	5	4	3	2	1	0
R	0																OFS															
W																																
Reset	0	0	0	0	0	0	0	0	0	0	0	0	0	0	0	0	0	0	0	0	0	0	0	0	0	0	0	0	0	1	0	0

ADCx_OFS field descriptions

Field	Description
31–16 Reserved	This field is reserved. This read-only field is reserved and always has the value 0.
OFS	Offset Error Correction Value

25.3.9 ADC Plus-Side Gain Register (ADCx_PG)

The Plus-Side Gain Register (PG) contains the gain error correction for the overall conversion in single-ended mode. PG, a 16-bit real number in binary format, is the gain adjustment factor, with the radix point fixed between ADPG15 and ADPG14. This register must be written by the user with the value described in the calibration procedure. Otherwise, the gain error specifications may not be met.

Address: 4003_B000h base + 2Ch offset = 4003_B02Ch

Bit	31	30	29	28	27	26	25	24	23	22	21	20	19	18	17	16	15	14	13	12	11	10	9	8	7	6	5	4	3	2	1	0
R	0																PG															
W																																
Reset	0	0	0	0	0	0	0	0	0	0	0	0	0	0	0	0	1	0	0	0	0	0	1	0	0	0	0	0	0	0	0	0

ADCx_PG field descriptions

Field	Description
31–16 Reserved	This field is reserved. This read-only field is reserved and always has the value 0.
PG	Plus-Side Gain

25.3.10 ADC Plus-Side General Calibration Value Register (ADCx_CLPD)

The Plus-Side General Calibration Value Registers (CLPx) contain calibration information that is generated by the calibration function. These registers contain seven calibration values of varying widths: CLP0[5:0], CLP1[6:0], CLP2[7:0], CLP3[8:0], CLP4[9:0], CLPS[5:0], and CLPD[5:0]. CLPx are automatically set when the self-calibration sequence is done, that is, CAL is cleared. If these registers are written by the user after calibration, the linearity error specifications may not be met.

Address: 4003_B000h base + 34h offset = 4003_B034h

Bit	31	30	29	28	27	26	25	24	23	22	21	20	19	18	17	16	15	14	13	12	11	10	9	8	7	6	5	4	3	2	1	0
R	0																										CLPD					
W																																
Reset	0	0	0	0	0	0	0	0	0	0	0	0	0	0	0	0	0	0	0	0	0	0	0	0	0	0	0	0	1	0	1	0

ADCx_CLPD field descriptions

Field	Description
31–6 Reserved	This field is reserved. This read-only field is reserved and always has the value 0.
CLPD	Calibration Value

25.3.11 ADC Plus-Side General Calibration Value Register (ADCx_CLPS)

For more information, see CLPD register description.

Address: 4003_B000h base + 38h offset = 4003_B038h

Bit	31	30	29	28	27	26	25	24	23	22	21	20	19	18	17	16	15	14	13	12	11	10	9	8	7	6	5	4	3	2	1	0
R	0																										CLPS					
W																																
Reset	0	0	0	0	0	0	0	0	0	0	0	0	0	0	0	0	0	0	0	0	0	0	0	0	0	0	1	0	0	0	0	0

ADCx_CLPS field descriptions

Field	Description
31–6 Reserved	This field is reserved. This read-only field is reserved and always has the value 0.
CLPS	Calibration Value

25.3.12 ADC Plus-Side General Calibration Value Register (ADCx_CLP4)

For more information, see CLPD register description.

Address: 4003_B000h base + 3Ch offset = 4003_B03Ch

Bit	31	30	29	28	27	26	25	24	23	22	21	20	19	18	17	16	15	14	13	12	11	10	9	8	7	6	5	4	3	2	1	0
R	0																						CLP4									
W																																
Reset	0	0	0	0	0	0	0	0	0	0	0	0	0	0	0	0	0	0	0	0	0	0	1	0	0	0	0	0	0	0	0	0

ADCx_CLP4 field descriptions

Field	Description
31–10 Reserved	This field is reserved. This read-only field is reserved and always has the value 0.
CLP4	Calibration Value

25.3.13 ADC Plus-Side General Calibration Value Register (ADCx_CLP3)

For more information, see CLPD register description.

Address: 4003_B000h base + 40h offset = 4003_B040h

Bit	31	30	29	28	27	26	25	24	23	22	21	20	19	18	17	16	15	14	13	12	11	10	9	8	7	6	5	4	3	2	1	0
R	0																							CLP3								
W																																
Reset	0	0	0	0	0	0	0	0	0	0	0	0	0	0	0	0	0	0	0	0	0	0	0	1	0	0	0	0	0	0	0	0

ADCx_CLP3 field descriptions

Field	Description
31–9 Reserved	This field is reserved. This read-only field is reserved and always has the value 0.
CLP3	Calibration Value

25.3.14 ADC Plus-Side General Calibration Value Register (ADCx_CLP2)

For more information, see CLPD register description.

Address: 4003_B000h base + 44h offset = 4003_B044h

Bit	31	30	29	28	27	26	25	24	23	22	21	20	19	18	17	16	15	14	13	12	11	10	9	8	7	6	5	4	3	2	1	0
R	0																								CLP2							
W																																
Reset	0	0	0	0	0	0	0	0	0	0	0	0	0	0	0	0	0	0	0	0	0	0	0	0	1	0	0	0	0	0	0	0

ADCx_CLP2 field descriptions

Field	Description
31–8 Reserved	This field is reserved. This read-only field is reserved and always has the value 0.
CLP2	Calibration Value

25.3.15 ADC Plus-Side General Calibration Value Register (ADCx_CLP1)

For more information, see CLPD register description.

Address: 4003_B000h base + 48h offset = 4003_B048h

Bit	31	30	29	28	27	26	25	24	23	22	21	20	19	18	17	16	15	14	13	12	11	10	9	8	7	6	5	4	3	2	1	0
R	0																									CLP1						
W																																
Reset	0	0	0	0	0	0	0	0	0	0	0	0	0	0	0	0	0	0	0	0	0	0	0	0	0	1	0	0	0	0	0	0

ADCx_CLP1 field descriptions

Field	Description
31–7 Reserved	This field is reserved. This read-only field is reserved and always has the value 0.
CLP1	Calibration Value

25.3.16 ADC Plus-Side General Calibration Value Register (ADCx_CLP0)

For more information, see CLPD register description.

Address: 4003_B000h base + 4Ch offset = 4003_B04Ch

Bit	31	30	29	28	27	26	25	24	23	22	21	20	19	18	17	16	15	14	13	12	11	10	9	8	7	6	5	4	3	2	1	0
R	0																										CLP0					
W																																
Reset	0	0	0	0	0	0	0	0	0	0	0	0	0	0	0	0	0	0	0	0	0	0	0	0	0	0	1	0	0	0	0	0

ADCx_CLP0 field descriptions

Field	Description
31–6 Reserved	This field is reserved. This read-only field is reserved and always has the value 0.
CLP0	Calibration Value

25.4 Functional description

The ADC module is disabled during reset, in Low-Power Stop mode, or when SC1n[ADCH] are all high; see the power management information for details. The module is idle when a conversion has completed and another conversion has not been initiated. When it is idle and the asynchronous clock output enable is disabled, or CFG2[ADACKEN]= 0, the module is in its lowest power state. The ADC can perform an analog-to-digital conversion on any of the software selectable channels. All modes perform conversion by a successive approximation algorithm.

To meet accuracy specifications, the ADC module must be calibrated using the on-chip calibration function. See Calibration function for details on how to perform calibration.

When the conversion is completed, the result is placed in the Rn data registers. The respective SC1n[COCO] is then set and an interrupt is generated if the respective conversion complete interrupt has been enabled, or, when SC1n[AIEN]=1.

The ADC module has the capability of automatically comparing the result of a conversion with the contents of the CV1 and CV2 registers. The compare function is enabled by setting SC2[ACFE] and operates in any of the conversion modes and configurations.

The ADC module has the capability of automatically averaging the result of multiple conversions. The hardware average function is enabled by setting SC3[AVGE] and operates in any of the conversion modes and configurations.

NOTE

For the chip specific modes of operation, see the power management information of this MCU.

25.4.1 Clock select and divide control

One of four clock sources can be selected as the clock source for the ADC module. This clock source is then divided by a configurable value to generate the input clock ADCK, to the module. The clock is selected from one of the following sources by means of CFG1[ADICLK].

- Bus clock. This is the default selection following reset.
- Bus clock divided by two. For higher bus clock rates, this allows a maximum divide-by-16 of the bus clock using CFG1[ADIV].
- ALTCLK: As defined for this MCU. See the chip configuration information.
- Asynchronous clock (ADACK): This clock is generated from a clock source within the ADC module. When the ADACK clock source is selected, it is not required to be active prior to conversion start. When it is selected and it is not active prior to a conversion start CFG2[ADACKEN]=0, ADACK is activated at the start of a conversion and deactivated when conversions are terminated. In this case, there is an associated clock startup delay each time the clock source is re-activated. To avoid the conversion time variability and latency associated with the ADACK clock startup, set CFG2[ADACKEN]=1 and wait the worst-case startup time of 5 μs prior to initiating any conversions using the ADACK clock source. Conversions are possible using ADACK as the input clock source while the MCU is in Normal Stop mode. See Power Control for more information.

Whichever clock is selected, its frequency must fall within the specified frequency range for ADCK. If the available clocks are too slow, the ADC may not perform according to specifications. If the available clocks are too fast, the clock must be divided to the appropriate frequency. This divider is specified by CFG1[ADIV] and can be divide-by 1, 2, 4, or 8.

25.4.2 Voltage reference selection

The ADC can be configured to accept one of the two voltage reference pairs as the reference voltage (V_{REFSH} and V_{REFSL}) used for conversions. Each pair contains a positive reference that must be between the minimum Ref Voltage High and V_{DDA}, and a

ground reference that must be at the same potential as V_{SSA}. The two pairs are external (V_{REFH} and V_{REFL}) and alternate (V_{ALTH} and V_{ALTL}). These voltage references are selected using SC2[REFSEL]. The alternate (V_{ALTH} and V_{ALTL}) voltage reference pair may select additional external pins or internal sources depending on MCU configuration. See the chip configuration information on the voltage references specific to this MCU.

25.4.3 Hardware trigger and channel selects

The ADC module has a selectable asynchronous hardware conversion trigger, ADHWT, that is enabled when SC2[ADTRG] is set and a hardware trigger select event, ADHWTSn, has occurred. This source is not available on all MCUs. See the Chip Configuration chapter for information on the ADHWT source and the ADHWTSn configurations specific to this MCU.

When an ADHWT source is available and hardware trigger is enabled, that is SC2[ADTRG]=1, a conversion is initiated on the rising-edge of ADHWT after a hardware trigger select event, that is, ADHWTSn, has occurred. If a conversion is in progress when a rising-edge of a trigger occurs, the rising-edge is ignored. In continuous convert configuration, only the initial rising-edge to launch continuous conversions is observed, and until conversion is aborted, the ADC continues to do conversions on the same SCn register that initiated the conversion. The hardware trigger function operates in conjunction with any of the conversion modes and configurations.

The hardware trigger select event, ADHWTSn, must be set prior to the receipt of the ADHWT signal. If these conditions are not met, the converter may ignore the trigger or use the incorrect configuration. If a hardware trigger select event is asserted during a conversion, it must stay asserted until the end of current conversion and remain set until the receipt of the ADHWT signal to trigger a new conversion. The channel and status fields selected for the conversion depend on the active trigger select signal:

- ADHWTSA active selects SC1A.
- ADHWTSn active selects SC1n.

Note

> Asserting more than one hardware trigger select signal (ADHWTSn) at the same time results in unknown results. To avoid this, select only one hardware trigger select signal (ADHWTSn) prior to the next intended conversion.

When the conversion is completed, the result is placed in the Rn registers associated with the ADHWTSn received. For example:

- ADHWTSA active selects RA register
- ADHWTSn active selects Rn register

The conversion complete flag associated with the ADHWTSn received, that is, SC1n[COCO], is then set and an interrupt is generated if the respective conversion complete interrupt has been enabled, that is, SC1[AIEN]=1.

25.4.4 Conversion control

Conversions can be performed as determined by CFG1[MODE] as shown in the description of CFG1[MODE].

Conversions can be initiated by a software or hardware trigger. In addition, the ADC module can be configured for:

- Low-power operation
- Long sample time
- Continuous conversion
- Hardware average
- Automatic compare of the conversion result to a software determined compare value

25.4.4.1 Initiating conversions

A conversion is initiated:

- Following a write to SC1A, with SC1n[ADCH] not all 1's, if software triggered operation is selected, that is, when SC2[ADTRG]=0.
- Following a hardware trigger, or ADHWT event, if hardware triggered operation is selected, that is, SC2[ADTRG]=1, and a hardware trigger select event, ADHWTSn, has occurred. The channel and status fields selected depend on the active trigger select signal:
  - ADHWTSA active selects SC1A.
  - ADHWTSn active selects SC1n.
  - if neither is active, the off condition is selected

Note

Selecting more than one ADHWTSn prior to a conversion completion will result in unknown results. To avoid this, select only one ADHWTSn prior to a conversion completion.

- Following the transfer of the result to the data registers when continuous conversion is enabled, that is, when SC3[ADCO] = 1.

If continuous conversions are enabled, a new conversion is automatically initiated after the completion of the current conversion. In software triggered operation, that is, when SC2[ADTRG] = 0, continuous conversions begin after SC1A is written and continue until aborted. In hardware triggered operation, that is, when SC2[ADTRG] = 1 and one ADHWTSn event has occurred, continuous conversions begin after a hardware trigger event and continue until aborted.

If hardware averaging is enabled, a new conversion is automatically initiated after the completion of the current conversion until the correct number of conversions are completed. In software triggered operation, conversions begin after SC1A is written. In hardware triggered operation, conversions begin after a hardware trigger. If continuous conversions are also enabled, a new set of conversions to be averaged are initiated following the last of the selected number of conversions.

25.4.4.2 Completing conversions

A conversion is completed when the result of the conversion is transferred into the data result registers, Rn. If the compare functions are disabled, this is indicated by setting of SC1n[COCO]. If hardware averaging is enabled, the respective SC1n[COCO] sets only if the last of the selected number of conversions is completed. If the compare function is enabled, the respective SC1n[COCO] sets and conversion result data is transferred only if the compare condition is true. If both hardware averaging and compare functions are enabled, then the respective SC1n[COCO] sets only if the last of the selected number of conversions is completed and the compare condition is true. An interrupt is generated if the respective SC1n[AIEN] is high at the time that the respective SC1n[COCO] is set.

25.4.4.3 Aborting conversions

Any conversion in progress is aborted when:

- Writing to SC1A while it is actively controlling a conversion, aborts the current conversion. In Software Trigger mode, when SC2[ADTRG]=0, a write to SC1A initiates a new conversion if SC1A[ADCH] is equal to a value other than all 1s. Writing to any of the SC1B–SC1n registers while that specific SC1B–SC1n register is actively controlling a conversion aborts the current conversion. The SC1(B-n) registers are not used for software trigger operation and therefore writes to the SC1(B-n) registers do not initiate a new conversion.
- A write to any ADC register besides the SC1A-SC1n registers occurs. This indicates that a change in mode of operation has occurred and the current conversion is therefore invalid.

- The MCU is reset or enters Low-Power Stop modes.
- The MCU enters Normal Stop mode with ADACK not enabled.

When a conversion is aborted, the contents of the data registers, Rn, are not altered. The data registers continue to be the values transferred after the completion of the last successful conversion. If the conversion was aborted by a reset or Low-Power Stop modes, RA and Rn return to their reset states.

25.4.4.4 Power control

The ADC module remains in its idle state until a conversion is initiated. If ADACK is selected as the conversion clock source, but the asynchronous clock output is disabled, that is CFG2[ADACKEN]=0, the ADACK clock generator also remains in its idle state (disabled) until a conversion is initiated. If the asynchronous clock output is enabled, that is, CFG2[ADACKEN]=1, it remains active regardless of the state of the ADC or the MCU power mode.

Power consumption when the ADC is active can be reduced by setting CFG1[ADLPC]. This results in a lower maximum value for f_{ADCK}.

25.4.4.5 Sample time and total conversion time

For short sample, that is, when CFG1[ADLSMP]=0, there is a 2-cycle adder for first conversion over the base sample time of four ADCK cycles. For high-speed conversions, that is, when CFG2[ADHSC]=1, there is an additional 2-cycle adder on any conversion. The table below summarizes sample times for the possible ADC configurations.

ADC configuration			Sample time (ADCK cycles)	
CFG1[ADLSMP]	CFG2[ADLSTS]	CFG2[ADHSC]	First or Single	Subsequent
0	X	0	6	4
1	00	0	24	
1	01	0	16	
1	10	0	10	
1	11	0	6	
0	X	1	8	6
1	00	1	26	
1	01	1	18	
1	10	1	12	
1	11	1	8	

The total conversion time depends upon:

- The sample time as determined by CFG1[ADLSMP] and CFG2[ADLSTS]
- The MCU bus frequency
- The conversion mode, as determined by CFG1[MODE]
- The high-speed configuration, that is, CFG2[ADHSC]
- The frequency of the conversion clock, that is, f_{ADCK}.

CFG2[ADHSC] is used to configure a higher clock input frequency. This will allow faster overall conversion times. To meet internal ADC timing requirements, CFG2[ADHSC] adds additional ADCK cycles. Conversions with CFG2[ADHSC]=1 take two more ADCK cycles. CFG2[ADHSC] must be used when the ADCLK exceeds the limit for CFG2[ADHSC]=0.

After the module becomes active, sampling of the input begins.

1. CFG1[ADLSMP] and CFG2[ADLSTS] select between sample times based on the conversion mode that is selected.
2. When sampling is completed, the converter is isolated from the input channel and a successive approximation algorithm is applied to determine the digital value of the analog signal.
3. The result of the conversion is transferred to Rn upon completion of the conversion algorithm.

If the bus frequency is less than f_{ADCK}, precise sample time for continuous conversions cannot be guaranteed when short sample is enabled, that is, when CFG1[ADLSMP]=0.

The maximum total conversion time is determined by the clock source chosen and the divide ratio selected. The clock source is selectable by CFG1[ADICLK], and the divide ratio is specified by CFG1[ADIV].

The maximum total conversion time for all configurations is summarized in the equation below. See the following tables for the variables referenced in the equation.

$$\text{ConversionTime} = \text{SFCAdder} + \text{AverageNum} \times \left(\text{BCT} + \text{LSTAdder} + \text{HSCAdder}\right)$$

Equation 1. Conversion time equation

Table 25-54. Single or first continuous time adder (SFCAdder)

CFG1[ADLSMP]	CFG2[ADACKEN]	CFG1[ADICLK]	Single or first continuous time adder (SFCAdder)
1	x	0x, 10	3 ADCK cycles + 5 bus clock cycles
1	1	11	3 ADCK cycles + 5 bus clock cycles[1]
1	0	11	5 µs + 3 ADCK cycles + 5 bus clock cycles
0	x	0x, 10	5 ADCK cycles + 5 bus clock cycles
0	1	11	5 ADCK cycles + 5 bus clock cycles[1]

Table continues on the next page...

Table 25-54. Single or first continuous time adder (SFCAdder) (continued)

CFG1[ADLSMP]	CFG2[ADACKEN]	CFG1[ADICLK]	Single or first continuous time adder (SFCAdder)
0	0	11	5 µs + 5 ADCK cycles + 5 bus clock cycles

1. To achieve this time, CFG2[ADACKEN] must be 1 for at least 5 µs prior to the conversion is initiated.

Table 25-55. Average number factor (AverageNum)

SC3[AVGE]	SC3[AVGS]	Average number factor (AverageNum)
0	xx	1
1	00	4
1	01	8
1	10	16
1	11	32

Table 25-56. Base conversion time (BCT)

Mode	Base conversion time (BCT)
8b single-ended	17 ADCK cycles
10b single-ended	20 ADCK cycles
12b single-ended	20 ADCK cycles

Table 25-57. Long sample time adder (LSTAdder)

CFG1[ADLSMP]	CFG2[ADLSTS]	Long sample time adder (LSTAdder)
0	xx	0 ADCK cycles
1	00	20 ADCK cycles
1	01	12 ADCK cycles
1	10	6 ADCK cycles
1	11	2 ADCK cycles

Table 25-58. High-speed conversion time adder (HSCAdder)

CFG2[ADHSC]	High-speed conversion time adder (HSCAdder)
0	0 ADCK cycles
1	2 ADCK cycles

Note

The ADCK frequency must be between f_{ADCK} minimum and f_{ADCK} maximum to meet ADC specifications.

25.4.4.6 Conversion time examples

The following examples use the Equation 1 on page 367, and the information provided in Table 25-54 through Table 25-58.

25.4.4.6.1 Typical conversion time configuration

A typical configuration for ADC conversion is:

- 10-bit mode, with the bus clock selected as the input clock source
- The input clock divide-by-1 ratio selected
- Bus frequency of 8 MHz
- Long sample time disabled
- High-speed conversion disabled

The conversion time for a single conversion is calculated by using the Equation 1 on page 367, and the information provided in Table 25-54 through Table 25-58. The table below lists the variables of Equation 1 on page 367.

Table 25-59. Typical conversion time

Variable	Time
SFCAdder	5 ADCK cycles + 5 bus clock cycles
AverageNum	1
BCT	20 ADCK cycles
LSTAdder	0
HSCAdder	0

The resulting conversion time is generated using the parameters listed in the preceding table. Therefore, for a bus clock and an ADCK frequency equal to 8 MHz, the resulting conversion time is 3.75 µs.

25.4.4.6.2 Short conversion time configuration

A configuration for short ADC conversion is:

- 8-bit Single-Ended mode with the bus clock selected as the input clock source
- The input clock divide-by-1 ratio selected
- Bus frequency of 20 MHz
- Long sample time disabled
- High-speed conversion enabled

The conversion time for this conversion is calculated by using the Equation 1 on page 367, and the information provided in Table 25-54 through Table 25-58. The table below lists the variables of Equation 1 on page 367.

Table 25-60. Typical conversion time

Variable	Time
SFCAdder	5 ADCK cycles + 5 bus clock cycles
AverageNum	1
BCT	17 ADCK cycles
LSTAdder	0 ADCK cycles
HSCAdder	2

The resulting conversion time is generated using the parameters listed in in the preceding table. Therefore, for bus clock and ADCK frequency equal to 20 MHz, the resulting conversion time is 1.45 µs.

25.4.4.7 Hardware average function

The hardware average function can be enabled by setting SC3[AVGE]=1 to perform a hardware average of multiple conversions. The number of conversions is determined by the AVGS[1:0] bits, which can select 4, 8, 16, or 32 conversions to be averaged. While the hardware average function is in progress, SC2[ADACT] will be set.

After the selected input is sampled and converted, the result is placed in an accumulator from which an average is calculated once the selected number of conversions have been completed. When hardware averaging is selected, the completion of a single conversion will not set SC1n[COCO].

If the compare function is either disabled or evaluates true, after the selected number of conversions are completed, the average conversion result is transferred into the data result registers, Rn, and SC1n[COCO] is set. An ADC interrupt is generated upon the setting of SC1n[COCO] if the respective ADC interrupt is enabled, that is, SC1n[AIEN]=1.

Note

The hardware average function can perform conversions on a channel while the MCU is in Wait or Normal Stop modes. The ADC interrupt wakes the MCU when the hardware average is completed if SC1n[AIEN] is set.

25.4.5 Automatic compare function

The compare function can be configured to check whether the result is less than or greater-than-or-equal-to a single compare value, or, if the result falls within or outside a range determined by two compare values. The compare mode is determined by SC2[ACFGT], SC2[ACREN], and the values in the compare value registers, CV1 and CV2. After the input is sampled and converted, the compare values in CV1 and CV2 are used as described in the following table. There are six Compare modes as shown in the following table.

Table 25-61. Compare modes

SC2[ACFGT]	SC2[ACREN]	ADCCV1 relative to ADCCV2	Function	Compare mode description
0	0	—	Less than threshold	Compare true if the result is less than the CV1 registers.
1	0	—	Greater than or equal to threshold	Compare true if the result is greater than or equal to CV1 registers.
0	1	Less than or equal	Outside range, not inclusive	Compare true if the result is less than CV1 **Or** the result is greater than CV2.
0	1	Greater than	Inside range, not inclusive	Compare true if the result is less than CV1 **And** the result is greater than CV2.
1	1	Less than or equal	Inside range, inclusive	Compare true if the result is greater than or equal to CV1 **And** the result is less than or equal to CV2.
1	1	Greater than	Outside range, inclusive	Compare true if the result is greater than or equal to CV1 **Or** the result is less than or equal to CV2.

With SC2[ACREN] =1, and if the value of CV1 is less than or equal to the value of CV2, then setting SC2[ACFGT] will select a trigger-if-inside-compare-range inclusive-of-endpoints function. Clearing SC2[ACFGT] will select a trigger-if-outside-compare-range, not-inclusive-of-endpoints function.

If CV1 is greater than CV2, setting SC2[ACFGT] will select a trigger-if-outside-compare-range, inclusive-of-endpoints function. Clearing SC2[ACFGT] will select a trigger-if-inside-compare-range, not-inclusive-of-endpoints function.

If the condition selected evaluates true, SC1n[COCO] is set.

Upon completion of a conversion while the compare function is enabled, if the compare condition is not true, SC1n[COCO] is not set and the conversion result data will not be transferred to the result register, Rn. If the hardware averaging function is enabled, the compare function compares the averaged result to the compare values. The same compare function definitions apply. An ADC interrupt is generated when SC1n[COCO] is set and the respective ADC interrupt is enabled, that is, SC1n[AIEN]=1.

Note

The compare function can monitor the voltage on a channel while the MCU is in Wait or Normal Stop modes. The ADC interrupt wakes the MCU when the compare condition is met.

25.4.6 Calibration function

The ADC contains a self-calibration function that is required to achieve the specified accuracy. Calibration must be run, or valid calibration values written, after any reset and before a conversion is initiated. The calibration function sets the offset calibration value and the plus-side calibration values. The offset calibration value is automatically stored in the ADC offset correction register (OFS), and the plus-side calibration values are automatically stored in the ADC plus-side calibration registers, CLPx. The user must configure the ADC correctly prior to calibration, and must generate the plus-side gain calibration results and store them in the ADC plus-side gain register (PG) after the calibration function completes.

Prior to calibration, the user must configure the ADC's clock source and frequency, low power configuration, voltage reference selection, sample time, and high speed configuration according to the application's clock source availability and needs. If the application uses the ADC in a wide variety of configurations, the configuration for which the highest accuracy is required should be selected, or multiple calibrations can be done for the different configurations. For best calibration results:

- Set hardware averaging to maximum, that is, SC3[AVGE]=1 and SC3[AVGS]=11 for an average of 32
- Set ADC clock frequency f_{ADCK} less than or equal to 4 MHz
- $V_{REFH}=V_{DDA}$
- Calibrate at nominal voltage and temperature

The input channel, conversion mode continuous function, compare function, resolution mode, and single-ended mode are all ignored during the calibration function.

To initiate calibration, the user sets SC3[CAL] and the calibration will automatically begin if the SC2[ADTRG] is 0. If SC2[ADTRG] is 1, SC3[CAL] will not get set and SC3[CALF] will be set. While calibration is active, no ADC register can be written and no stop mode may be entered, or the calibration routine will be aborted causing SC3[CAL] to clear and SC3[CALF] to set. At the end of a calibration sequence, SC1n[COCO] will be set. SC1n[AIEN] can be used to allow an interrupt to occur at the end of a calibration sequence. At the end of the calibration routine, if SC3[CALF] is not set, the automatic calibration routine is completed successfully.

To complete calibration, the user must generate the gain calibration values using the following procedure:

1. Initialize or clear a 16-bit variable in RAM.
2. Add the plus-side calibration results CLP0, CLP1, CLP2, CLP3, CLP4, and CLPS to the variable.
3. Divide the variable by two.
4. Set the MSB of the variable.
5. The previous two steps can be achieved by setting the carry bit, rotating to the right through the carry bit on the high byte and again on the low byte.
6. Store the value in the plus-side gain calibration register PG.

When calibration is complete, the user may reconfigure and use the ADC as desired. A second calibration may also be performed, if desired, by clearing and again setting SC3[CAL].

Overall, the calibration routine may take as many as 14k ADCK cycles and 100 bus cycles, depending on the results and the clock source chosen. For an 8 MHz clock source, this length amounts to about 1.7 ms. To reduce this latency, the calibration values, which are offset, plus-side gain, and plus-side calibration values, may be stored in flash memory after an initial calibration and recovered prior to the first ADC conversion. This method can reduce the calibration latency to 20 register store operations on all subsequent power, reset, or Low-Power Stop mode recoveries.

25.4.7 User-defined offset function

OFS contains the user-selected or calibration-generated offset error correction value. This register is a 2’s complement, left-justified. The value in OFS is subtracted from the conversion and the result is transferred into the result registers, Rn. If the result is greater than the maximum or less than the minimum result value, it is forced to the appropriate limit for the current mode of operation.

The formatting of the OFS is different from the data result register, Rn, to preserve the resolution of the calibration value regardless of the conversion mode selected. Lower order bits are ignored in lower resolution modes. For example, in 8-bit single-ended mode, OFS[14:7] are subtracted from D[7:0]; OFS[15] indicates the sign (negative numbers are effectively added to the result) and OFS[6:0] are ignored.

OFS is automatically set according to calibration requirements once the self-calibration sequence is done, that is, SC3[CAL] is cleared. The user may write to OFS to override the calibration result if desired. If the OFS is written by the user to a value that is different from the calibration value, the ADC error specifications may not be met. Storing the value generated by the calibration function in memory before overwriting with a user-specified value is recommended.

Note

> There is an effective limit to the values of offset that can be set by the user. If the magnitude of the offset is too high, the results of the conversions will cap off at the limits.

The offset calibration function may be employed by the user to remove application offsets or DC bias values. OFS may be written with a number in 2's complement format and this offset will be subtracted from the result, or hardware averaged value. To add an offset, store the negative offset in 2's complement format and the effect will be an addition. An offset correction that results in an out-of-range value will be forced to the minimum or maximum value. The minimum value for single-ended conversions is 0x0000.

To preserve accuracy, the calibrated offset value initially stored in OFS must be added to the user-defined offset. For applications that may change the offset repeatedly during operation, store the initial offset calibration value in flash so it can be recovered and added to any user offset adjustment value and the sum stored in OFS.

25.4.8 Temperature sensor

The ADC module includes a temperature sensor whose output is connected to one of the ADC analog channel inputs. The following equation provides an approximate transfer function of the temperature sensor.

$$\mathrm{Temp} = 25 - \left(\left(V_{TEMP} - V_{TEMP25}\right) \div m\right)$$

Equation 2. Approximate transfer function of the temperature sensor

where:

- V_{TEMP} is the voltage of the temperature sensor channel at the ambient temperature.
- V_{TEMP25} is the voltage of the temperature sensor channel at 25 °C.
- m is referred as temperature sensor slope in the device data sheet. It is the hot or cold voltage versus temperature slope in V/°C.

For temperature calculations, use the V_{TEMP25} and temperature sensor slope values from the ADC Electricals table.

In application code, the user reads the temperature sensor channel, calculates V_{TEMP}, and compares to V_{TEMP25}. If V_{TEMP} is greater than V_{TEMP25} the cold slope value is applied in the preceding equation. If V_{TEMP} is less than V_{TEMP25}, the hot slope value is applied in the preceding equation. ADC Electricals table may only specify one temperature sensor slope value. In that case, the user could use the same slope for the calculation across the operational temperature range.

For more information on using the temperature sensor, see the application note titled *Temperature Sensor for the HCS08 Microcontroller Family* (document AN3031).

25.4.9 MCU wait mode operation

Wait mode is a lower-power consumption Standby mode from which recovery is fast because the clock sources remain active. If a conversion is in progress when the MCU enters Wait mode, it continues until completion. Conversions can be initiated while the MCU is in Wait mode by means of the hardware trigger or if continuous conversions are enabled.

The bus clock, bus clock divided by two, and ADACK are available as conversion clock sources while in Wait mode. The use of ALTCLK as the conversion clock source in Wait is dependent on the definition of ALTCLK for this MCU. See the Chip Configuration information on ALTCLK specific to this MCU.

If the compare and hardware averaging functions are disabled, a conversion complete event sets SC1n[COCO] and generates an ADC interrupt to wake the MCU from Wait mode if the respective ADC interrupt is enabled, that is, when SC1n[AIEN]=1. If the hardware averaging function is enabled, SC1n[COCO] will set, and generate an interrupt if enabled, when the selected number of conversions are completed. If the compare function is enabled, SC1n[COCO] will set, and generate an interrupt if enabled, only if the compare conditions are met. If a single conversion is selected and the compare trigger is not met, the ADC will return to its idle state and cannot wake the MCU from Wait mode unless a new conversion is initiated by the hardware trigger.

25.4.10 MCU Normal Stop mode operation

Stop mode is a low-power consumption Standby mode during which most or all clock sources on the MCU are disabled.

25.4.10.1 Normal Stop mode with ADACK disabled

If the asynchronous clock, ADACK, is not selected as the conversion clock, executing a stop instruction aborts the current conversion and places the ADC in its Idle state. The contents of the ADC registers, including Rn, are unaffected by Normal Stop mode. After exiting from Normal Stop mode, a software or hardware trigger is required to resume conversions.

25.4.10.2 Normal Stop mode with ADACK enabled

If ADACK is selected as the conversion clock, the ADC continues operation during Normal Stop mode. See the chip configuration chapter for configuration information for this MCU.

If a conversion is in progress when the MCU enters Normal Stop mode, it continues until completion. Conversions can be initiated while the MCU is in Normal Stop mode by means of the hardware trigger or if continuous conversions are enabled.

If the compare and hardware averaging functions are disabled, a conversion complete event sets SC1n[COCO] and generates an ADC interrupt to wake the MCU from Normal Stop mode if the respective ADC interrupt is enabled, that is, when SC1n[AIEN]=1. The result register, Rn, will contain the data from the first completed conversion that occurred during Normal Stop mode. If the hardware averaging function is enabled, SC1n[COCO] will set, and generate an interrupt if enabled, when the selected number of conversions are completed. If the compare function is enabled, SC1n[COCO] will set, and generate an interrupt if enabled, only if the compare conditions are met. If a single conversion is selected and the compare is not true, the ADC will return to its Idle state and cannot wake the MCU from Normal Stop mode unless a new conversion is initiated by another hardware trigger.

25.4.11 MCU Low-Power Stop mode operation

The ADC module is automatically disabled when the MCU enters Low-Power Stop mode. All module registers contain their reset values following exit from Low-Power Stop mode. Therefore, the module must be re-enabled and re-configured following exit from Low-Power Stop mode.

NOTE

For the chip specific modes of operation, see the power management information for the device.

25.5 Initialization information

This section gives an example that provides some basic direction on how to initialize and configure the ADC module. The user can configure the module for 12-bit, 10-bit, or 8-bit single-ended resolution, single or continuous conversion, and a polled or interrupt approach, among many other options. For information used in this example, refer to Table 25-57, Table 25-58, and Table 25-59.

Note

Hexadecimal values are designated by a preceding 0x, binary values designated by a preceding %, and decimal values have no preceding character.

25.5.1 ADC module initialization example

25.5.1.1 Initialization sequence

Before the ADC module can be used to complete conversions, an initialization procedure must be performed. A typical sequence is:

1. Calibrate the ADC by following the calibration instructions in Calibration function.
2. Update CFG to select the input clock source and the divide ratio used to generate ADCK. This register is also used for selecting sample time and low-power configuration.
3. Update SC2 to select the conversion trigger, hardware or software, and compare function options, if enabled.
4. Update SC3 to select whether conversions will be continuous or completed only once (ADCO) and whether to perform hardware averaging.
5. Update SC1:SC1n registers to enable or disable conversion complete interrupts. Also, select the input channel which can be used to perform conversions.

25.5.1.2 Pseudo-code example

In this example, the ADC module is set up with interrupts enabled to perform a single 10-bit conversion at low-power with a long sample time on input channel 1, where ADCK is derived from the bus clock divided by 1.

CFG1 = 0x98 (%10011000)

```
Bit 7    ADLPC    1      Configures for low power, lowers maximum clock speed.
Bit 6:5  ADIV     00     Sets the ADCK to the input clock ÷ 1.
Bit 4    ADLSMP   1      Configures for long sample time.
Bit 3:2    MODE    10    Selects the single-ended 10-bit conversion.
Bit 1:0    ADICLK    00    Selects the bus clock.
```

SC2 = 0x00 (%00000000)

```
Bit 7    ADACT    0       Flag indicates if a conversion is in progress.
Bit 6    ADTRG    0       Software trigger selected.
Bit 5    ACFE     0       Compare function disabled.
Bit 4    ACFGT    0       Not used in this example.
Bit 3    ACREN    0      Compare range disabled.

Bit 1:0  REFSEL   00     Selects default voltage reference pin pair (External pins VREFH
and VREFL).
```

SC1A = 0x41 (%01000001)

```
Bit 7    COCO    0       Read-only flag which is set when a conversion completes.
Bit 6    AIEN    1       Conversion complete interrupt enabled.

Bit 4:0  ADCH    00001   Input channel 1 selected as ADC input channel.
```

RA = 0xxx

```
Holds results of conversion.
```

CV = 0xxx

```
Holds compare value when compare function enabled.
```

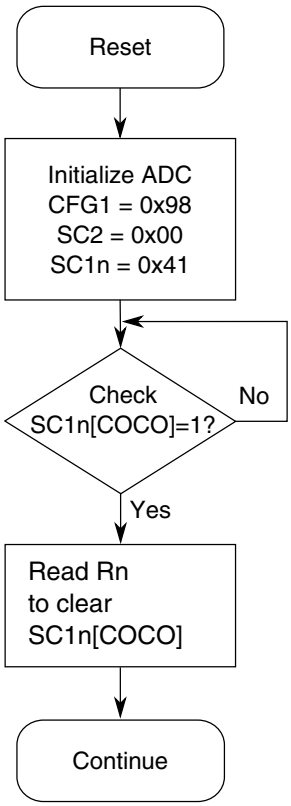

Figure 25-46. Initialization flowchart example

25.6 Application information

The ADC has been designed to be integrated into a microcontroller for use in embedded control applications requiring an ADC.

25.6.1 External pins and routing

25.6.1.1 Analog supply pins

Depending on the device, the analog power and ground supplies, V_{DDA} and V_{SSA}, of the ADC module are available as:

- V_{DDA} and V_{SSA} available as separate pins—When available on a separate pin, both V_{DDA} and V_{SSA} must be connected to the same voltage potential as their corresponding MCU digital supply, V_{DD} and V_{SS}, and must be routed carefully for maximum noise immunity and bypass capacitors placed as near as possible to the package.

- V_{SSA} is shared on the same pin as the MCU digital V_{SS}.
- V_{SSA} and V_{DDA} are shared with the MCU digital supply pins—In these cases, there are separate pads for the analog supplies bonded to the same pin as the corresponding digital supply so that some degree of isolation between the supplies is maintained.

If separate power supplies are used for analog and digital power, the ground connection between these supplies must be at the V_{SSA} pin. This must be the only ground connection between these supplies, if possible. V_{SSA} makes a good single point ground location.

25.6.1.2 Analog voltage reference pins

In addition to the analog supplies, the ADC module has connections for two reference voltage inputs used by the converter:

- V_{REFSH} is the high reference voltage for the converter.
- V_{REFSL} is the low reference voltage for the converter.

The ADC can be configured to accept one of two voltage reference pairs for V_{REFSH} and V_{REFSL}. Each pair contains a positive reference and a ground reference. The two pairs are external, V_{REFH} and V_{REFL} and alternate, V_{ALTH} and V_{ALTL}. These voltage references are selected using SC2[REFSEL]. The alternate voltage reference pair, V_{ALTH} and V_{ALTL}, may select additional external pins or internal sources based on MCU configuration. See the chip configuration information on the voltage references specific to this MCU.

In some packages, the external or alternate pairs are connected in the package to V_{DDA} and V_{SSA}, respectively. One of these positive references may be shared on the same pin as V_{DDA} on some devices. One of these ground references may be shared on the same pin as V_{SSA} on some devices.

If externally available, the positive reference may be connected to the same potential as V_{DDA} or may be driven by an external source to a level between the minimum Ref Voltage High and the V_{DDA} potential. The positive reference must never exceed V_{DDA}. If externally available, the ground reference must be connected to the same voltage potential as V_{SSA}. The voltage reference pairs must be routed carefully for maximum noise immunity and bypass capacitors placed as near as possible to the package.

AC current in the form of current spikes required to supply charge to the capacitor array at each successive approximation step is drawn through the V_{REFH} and V_{REFL} loop. The best external component to meet this current demand is a 0.1 μF capacitor with good high-frequency characteristics. This capacitor is connected between V_{REFH} and V_{REFL} and must be placed as near as possible to the package pins. Resistance in the path is not recommended because the current causes a voltage drop that could result in conversion errors. Inductance in this path must be minimum, that is, parasitic only.

25.6.1.3 Analog input pins

The external analog inputs are typically shared with digital I/O pins on MCU devices.

Empirical data shows that capacitors on the analog inputs improve performance in the presence of noise or when the source impedance is high. Use of 0.01 μF capacitors with good high-frequency characteristics is sufficient. These capacitors are not necessary in all cases, but when used, they must be placed as near as possible to the package pins and be referenced to V_{SSA}.

For proper conversion, the input voltage must fall between V_{REFH} and V_{REFL}. If the input is equal to or exceeds V_{REFH}, the converter circuit converts the signal to 0xFFF, which is full scale 12-bit representation, 0x3FF, which is full scale 10-bit representation, or 0xFF, which is full scale 8-bit representation. If the input is equal to or less than V_{REFL}, the converter circuit converts it to 0x000. Input voltages between V_{REFH} and V_{REFL} are straight-line linear conversions. There is a brief current associated with V_{REFL} when the sampling capacitor is charging.

For minimal loss of accuracy due to current injection, pins adjacent to the analog input pins must not be transitioning during conversions.

25.6.2 Sources of error

25.6.2.1 Sampling error

For proper conversions, the input must be sampled long enough to achieve the proper accuracy.

$$RAS + RADIN = SC / (FMAX * NUMTAU * CADIN)$$

Figure 25-47. Sampling equation

Where:

RAS = External analog source resistance

SC = Number of ADCK cycles used during sample window

CADIN = Internal ADC input capacitance

NUMTAU = $-\ln(LSBERR / 2^N)$

LSBERR = value of acceptable sampling error in LSBs

N = 8 in 8-bit mode, 10 in 10-bit mode, 12 in 12-bit mode

Higher source resistances or higher-accuracy sampling is possible by setting CFG1[ADLSMP] and changing CFG2[ADLSTS] to increase the sample window, or decreasing ADCK frequency to increase sample time.

25.6.2.2 Pin leakage error

Leakage on the I/O pins can cause conversion error if the external analog source resistance, R_{AS}, is high. If this error cannot be tolerated by the application, keep R_{AS} lower than $V_{REFH} / (4 \times I_{LEAK} \times 2^N)$ for less than 1/4 LSB leakage error, where N = 8 in 8-bit mode, 10 in 10-bit mode, 12 in 12-bit mode.

25.6.2.3 Noise-induced errors

System noise that occurs during the sample or conversion process can affect the accuracy of the conversion. The ADC accuracy numbers are guaranteed as specified only if the following conditions are met:

- There is a 0.1 μF low-ESR capacitor from V_{REFH} to V_{REFL}.
- There is a 0.1 μF low-ESR capacitor from V_{DDA} to V_{SSA}.
- If inductive isolation is used from the primary supply, an additional 1 μF capacitor is placed from V_{DDA} to V_{SSA}.
- V_{SSA}, and V_{REFL}, if connected, is connected to V_{SS} at a quiet point in the ground plane.
- Operate the MCU in Wait or Normal Stop mode before initiating (hardware-triggered conversions) or immediately after initiating (hardware- or software-triggered conversions) the ADC conversion.
    - For software triggered conversions, immediately follow the write to SC1 with a Wait instruction or Stop instruction.
    - For Normal Stop mode operation, select ADACK as the clock source. Operation in Normal Stop reduces V_{DD} noise but increases effective conversion time due to stop recovery.
- There is no I/O switching, input or output, on the MCU during the conversion.

There are some situations where external system activity causes radiated or conducted noise emissions or excessive V_{DD} noise is coupled into the ADC. In these situations, or when the MCU cannot be placed in Wait or Normal Stop mode, or I/O activity cannot be halted, the following actions may reduce the effect of noise on the accuracy:

- Place a 0.01 μF capacitor (C_{AS}) on the selected input channel to V_{REFL} or V_{SSA}. This improves noise issues, but affects the sample rate based on the external analog source resistance.
- Average the result by converting the analog input many times in succession and dividing the sum of the results. Four samples are required to eliminate the effect of a 1 LSB, one-time error.
- Reduce the effect of synchronous noise by operating off the asynchronous clock, that is, ADACK, and averaging. Noise that is synchronous to ADCK cannot be averaged out.

25.6.2.4 Code width and quantization error

The ADC quantizes the ideal straight-line transfer function into 4096 steps in the 12-bit mode). Each step ideally has the same height, that is, 1 code, and width. The width is defined as the delta between the transition points to one code and the next. The ideal code width for an N-bit converter, where N can be 12, 10, or 8, defined as 1 LSB, is:

$$1\text{LSB} = \left(V_{REFH} \right) / 2^{N}$$

Equation 3. Ideal code width for an N-bit converter

There is an inherent quantization error due to the digitization of the result. For 8-bit, 10-bit, or 12-bit conversions, the code transitions when the voltage is at the midpoint between the points where the straight line transfer function is exactly represented by the actual transfer function. Therefore, the quantization error will be ± 1/2 LSB in 8-bit, 10-bit, or 12-bit modes. As a consequence, however, the code width of the first (0x000) conversion is only 1/2 LSB and the code width of the last (0xFF or 0x3FF) is 1.5 LSB.

25.6.2.5 Linearity errors

The ADC may also exhibit non-linearity of several forms. Every effort has been made to reduce these errors, but the system designers must be aware of these errors because they affect overall accuracy:

- Zero-scale error (E_{ZS}), sometimes called offset: This error is defined as the difference between the actual code width of the first conversion and the ideal code width. This is 1/2 LSB in 8-bit, 10-bit, or 12-bit modes. If the first conversion is 0x001, the difference between the actual 0x001 code width and its ideal (1 LSB) is used.
- Full-scale error (E_{FS}): This error is defined as the difference between the actual code width of the last conversion and the ideal code width. This is 1.5 LSB in 8-bit, 10-bit, or 12-bit modes. If the last conversion is 0x3FE, the difference between the actual 0x3FE code width and its ideal (1 LSB) is used.
- Differential non-linearity (DNL): This error is defined as the worst-case difference between the actual code width and the ideal code width for all conversions.
- Integral non-linearity (INL): This error is defined as the highest-value or absolute value that the running sum of DNL achieves. More simply, this is the worst-case difference of the actual transition voltage to a given code and its corresponding ideal transition voltage, for all codes.
- Total unadjusted error (TUE): This error is defined as the difference between the actual transfer function and the ideal straight-line transfer function and includes all forms of error.

25.6.2.6 Code jitter, non-monotonicity, and missing codes

Analog-to-digital converters are susceptible to three special forms of error:

- Code jitter: Code jitter is when, at certain points, a given input voltage converts to one of the two values when sampled repeatedly. Ideally, when the input voltage is infinitesimally smaller than the transition voltage, the converter yields the lower code, and vice-versa. However, even small amounts of system noise can cause the converter to be indeterminate, between two codes, for a range of input voltages around the transition voltage.

  This error may be reduced by repeatedly sampling the input and averaging the result. Additionally, the techniques discussed in Noise-induced errors reduces this error.

- Non-monotonicity: Non-monotonicity is defined as when, except for code jitter, the converter converts to a lower code for a higher input voltage.
- Missing codes: Missing codes are those values never converted for any input value.

In 8-bit or 10-bit mode, the ADC is guaranteed to be monotonic and have no missing codes.

Chapter 26
Comparator (CMP)

26.1 Introduction

NOTE

For the chip-specific implementation details of this module's instances, see the chip configuration information.

The comparator (CMP) module provides a circuit for comparing two analog input voltages. The comparator circuit is designed to operate across the full range of the supply voltage, known as rail-to-rail operation.

The Analog MUX (ANMUX) provides a circuit for selecting an analog input signal from eight channels. One signal is provided by the 6-bit digital-to-analog converter (DAC). The mux circuit is designed to operate across the full range of the supply voltage.

The 6-bit DAC is 64-tap resistor ladder network which provides a selectable voltage reference for applications where voltage reference is needed. The 64-tap resistor ladder network divides the supply reference V_{in} into 64 voltage levels. A 6-bit digital signal input selects the output voltage level, which varies from V_{in} to $V_{in}/64$. V_{in} can be selected from two voltage sources, V_{in1} and V_{in2}. The 6-bit DAC from a comparator is available as an on-chip internal signal only and is not available externally to a pin.

26.2 CMP features

The CMP has the following features:

- Operational over the entire supply range
- Inputs may range from rail to rail
- Programmable hysteresis control

- Selectable interrupt on rising-edge, falling-edge, or both rising or falling edges of the comparator output
- Selectable inversion on comparator output
- Capability to produce a wide range of outputs such as:
  - Sampled
  - Windowed, which is ideal for certain PWM zero-crossing-detection applications
  - Digitally filtered:
    - Filter can be bypassed
    - Can be clocked via external SAMPLE signal or scaled bus clock
- External hysteresis can be used at the same time that the output filter is used for internal functions
- Two software selectable performance levels:
  - Shorter propagation delay at the expense of higher power
  - Low power, with longer propagation delay
- Functional in all modes of operation
- The window and filter functions are not available in the following modes:
  - Stop
  - VLPS

26.3 6-bit DAC key features

- 6-bit resolution
- Selectable supply reference source
- Power Down mode to conserve power when not in use
- Option to route the output to internal comparator input

26.4 ANMUX key features

- Two 8-to-1 channel mux
- Operational over the entire supply range

26.5 CMP, DAC and ANMUX diagram

The following figure shows the block diagram for the High-Speed Comparator, DAC, and ANMUX modules.

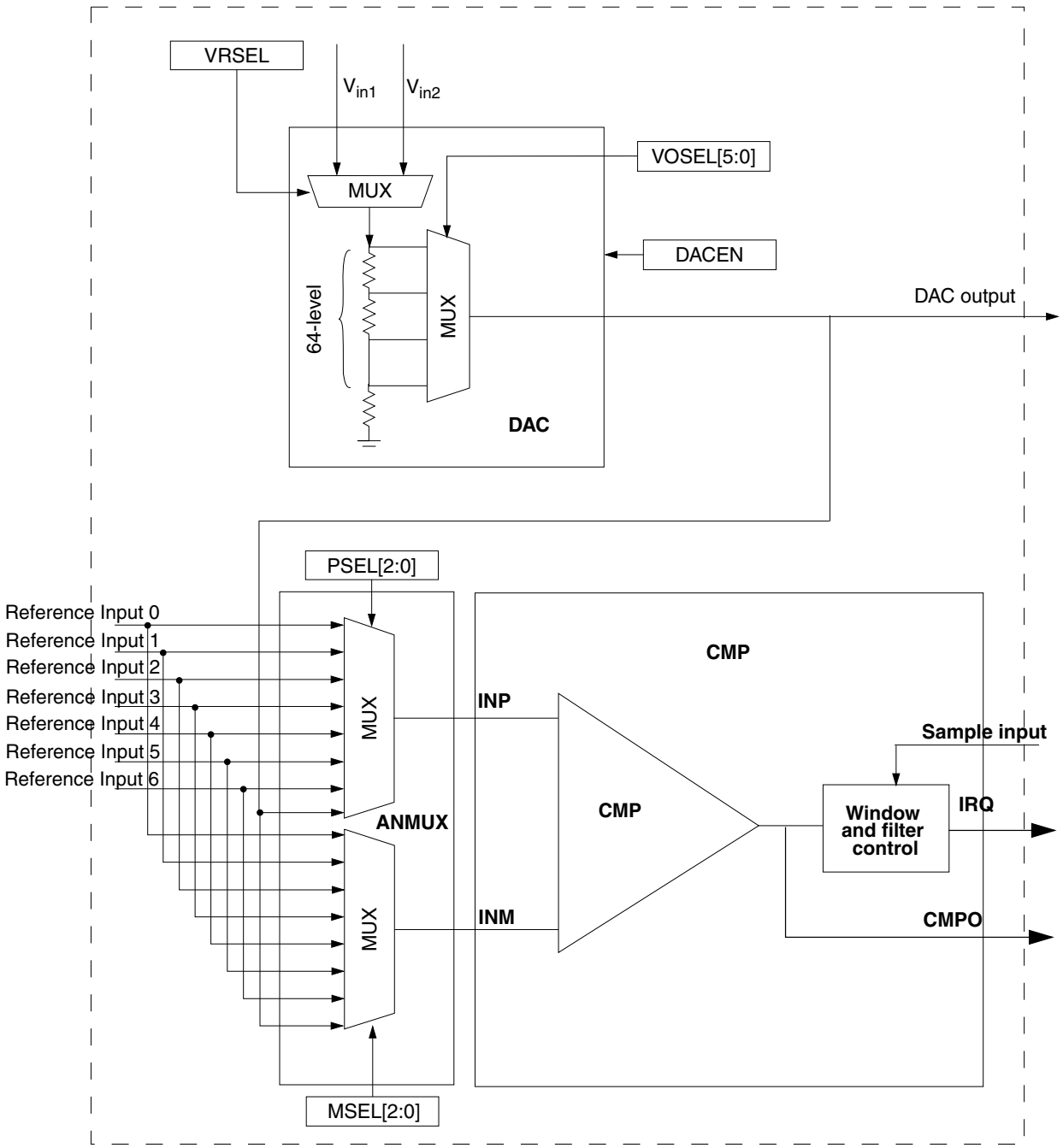

Figure 26-1. CMP, DAC and ANMUX block diagram

26.6 CMP block diagram

The following figure shows the block diagram for the CMP module.

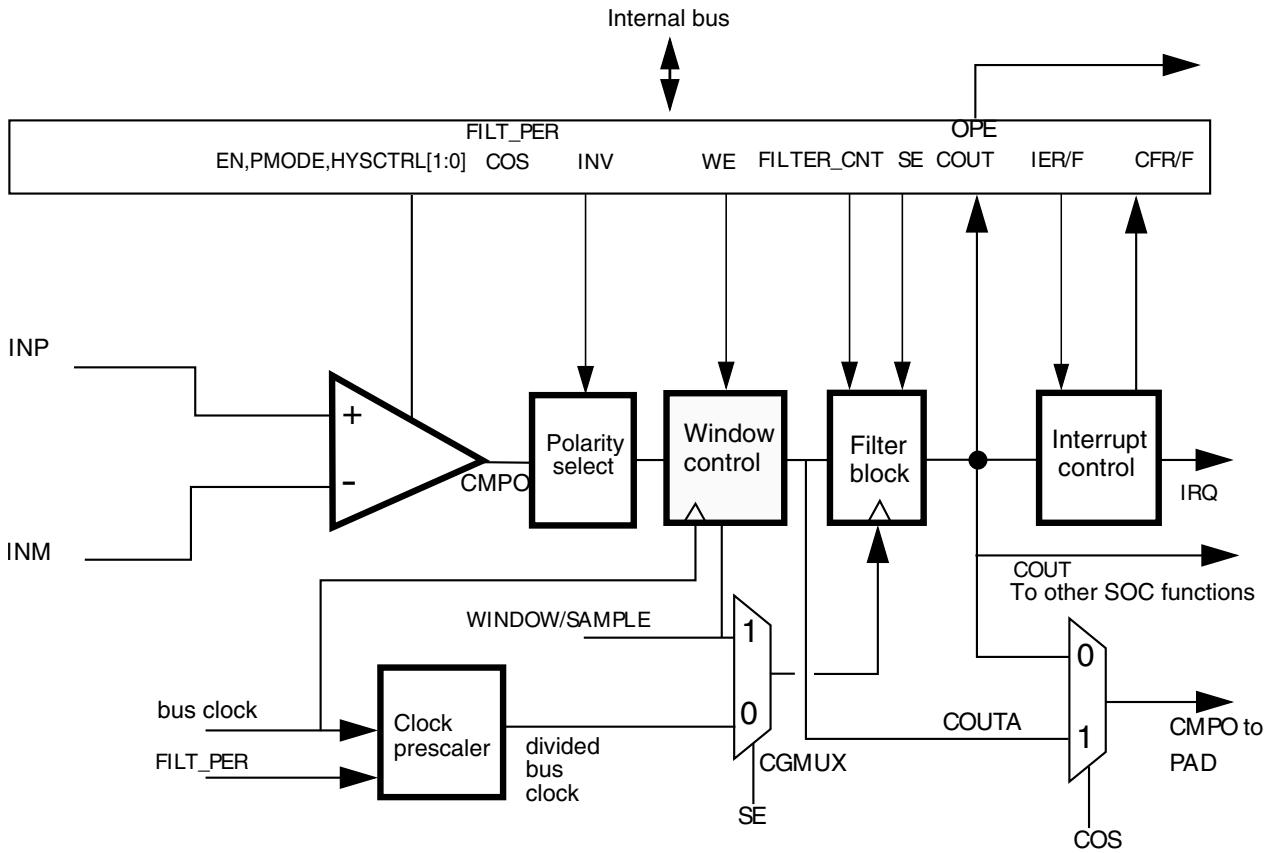

Figure 26-2. Comparator module block diagram

In the CMP block diagram:

- The Window Control block is bypassed when CR1[WE] = 0
- If CR1[WE] = 1, the comparator output will be sampled on every bus clock when WINDOW=1 to generate COUTA. Sampling does NOT occur when WINDOW = 0.
- The Filter block is bypassed when not in use.
- The Filter block acts as a simple sampler if the filter is bypassed and CR0[FILTER_CNT] is set to 0x01.
- The Filter block filters based on multiple samples when the filter is bypassed and CR0[FILTER_CNT] is set greater than 0x01.

- If CR1[SE] = 1, the external SAMPLE input is used as sampling clock
- IF CR1[SE] = 0, the divided bus clock is used as sampling clock

- If enabled, the Filter block will incur up to one bus clock additional latency penalty on COUT due to the fact that COUT, which is crossing clock domain boundaries, must be resynchronized to the bus clock.
- CR1[WE] and CR1[SE] are mutually exclusive.

26.7 Memory map/register definitions

CMP memory map

Absolute address (hex)	Register name	Width (in bits)	Access	Reset value	Section/ page
4007_3000	CMP Control Register 0 (CMP0_CR0)	8	R/W	00h	26.7.1/389
4007_3001	CMP Control Register 1 (CMP0_CR1)	8	R/W	00h	26.7.2/390
4007_3002	CMP Filter Period Register (CMP0_FPR)	8	R/W	00h	26.7.3/392
4007_3003	CMP Status and Control Register (CMP0_SCR)	8	R/W	00h	26.7.4/392
4007_3004	DAC Control Register (CMP0_DACCR)	8	R/W	00h	26.7.5/393
4007_3005	MUX Control Register (CMP0_MUXCR)	8	R/W	00h	26.7.6/394

26.7.1 CMP Control Register 0 (CMPx_CR0)

Address: 4007_3000h base + 0h offset = 4007_3000h

Bit	7	6	5	4	3	2	1	0
Read	0	FILTER_CNT			0	0	HYSTCTR	
Write								
Reset	0	0	0	0	0	0	0	0

CMPx_CR0 field descriptions

Field	Description
7 Reserved	This field is reserved. This read-only field is reserved and always has the value 0.
6–4 FILTER_CNT	Filter Sample Count Represents the number of consecutive samples that must agree prior to the comparator ouput filter accepting a new output state. For information regarding filter programming and latency, see the Functional description. 000 Filter is disabled. If SE = 1, then COUT is a logic 0. This is not a legal state, and is not recommended. If SE = 0, COUT = COUTA.

Table continues on the next page...

CMPx_CR0 field descriptions (continued)

Field	Description
	001 One sample must agree. The comparator output is simply sampled. 010 2 consecutive samples must agree. 011 3 consecutive samples must agree. 100 4 consecutive samples must agree. 101 5 consecutive samples must agree. 110 6 consecutive samples must agree. 111 7 consecutive samples must agree.
3 Reserved	This field is reserved. This read-only field is reserved and always has the value 0.
2 Reserved	This field is reserved. This read-only field is reserved and always has the value 0.
HYSTCTR	Comparator hard block hysteresis control Defines the programmable hysteresis level. The hysteresis values associated with each level are device-specific. See the Data Sheet of the device for the exact values. 00 Level 0 01 Level 1 10 Level 2 11 Level 3

26.7.2 CMP Control Register 1 (CMPx_CR1)

Address: 4007_3000h base + 1h offset = 4007_3001h

Bit	7	6	5	4	3	2	1	0
Read Write	SE	WE	TRIGM	PMODE	INV	COS	OPE	EN
Reset	0	0	0	0	0	0	0	0

CMPx_CR1 field descriptions

Field	Description
7 SE	Sample Enable At any given time, either SE or WE can be set. It is mandatory request to not set SE and WE both at a given time. 0 Sampling mode is not selected. 1 Sampling mode is selected.
6 WE	Windowing Enable At any given time, either SE or WE can be set. It is mandatory request to not set SE and WE both at a given time. 0 Windowing mode is not selected. 1 Windowing mode is selected.

Table continues on the next page...

CMPx_CR1 field descriptions (continued)

Field	Description
5 TRIGM	Trigger Mode Enable CMP and DAC are configured to CMP Trigger mode when CMP_CR1[TRIGM] is set to 1. In addition, the CMP should be enabled. If the DAC is to be used as a reference to the CMP, it should also be enabled. CMP Trigger mode depends on an external timer resource to periodically enable the CMP and 6-bit DAC in order to generate a triggered compare. Upon setting TRIGM, the CMP and DAC are placed in a standby state until an external timer resource trigger is received. See the chip configuration chapter for details about the external timer resource. 0 Trigger mode is disabled. 1 Trigger mode is enabled.
4 PMODE	Power Mode Select See the electrical specifications table in the device Data Sheet for details. 0 Low-Speed (LS) Comparison mode selected. In this mode, CMP has slower output propagation delay and lower current consumption. 1 High-Speed (HS) Comparison mode selected. In this mode, CMP has faster output propagation delay and higher current consumption.
3 INV	Comparator INVERT Allows selection of the polarity of the analog comparator function. It is also driven to the COUT output, on both the device pin and as SCR[COUT], when OPE=0. 0 Does not invert the comparator output. 1 Inverts the comparator output.
2 COS	Comparator Output Select 0 Set the filtered comparator output (CMPO) to equal COUT. 1 Set the unfiltered comparator output (CMPO) to equal COUTA.
1 OPE	Comparator Output Pin Enable 0 CMPO is not available on the associated CMPO output pin. If the comparator does not own the pin, this field has no effect. 1 CMPO is available on the associated CMPO output pin. The comparator output (CMPO) is driven out on the associated CMPO output pin if the comparator owns the pin. If the comparator does not own the field, this bit has no effect.
0 EN	Comparator Module Enable Enables the Analog Comparator module. When the module is not enabled, it remains in the off state, and consumes no power. When the user selects the same input from analog mux to the positive and negative port, the comparator is disabled automatically. 0 Analog Comparator is disabled. 1 Analog Comparator is enabled.

26.7.3 CMP Filter Period Register (CMPx_FPR)

Address: 4007_3000h base + 2h offset = 4007_3002h

Bit	7	6	5	4	3	2	1	0
Read Write	FILT_PER							
Reset	0	0	0	0	0	0	0	0

CMPx_FPR field descriptions

Field	Description
FILT_PER	Filter Sample Period Specifies the sampling period, in bus clock cycles, of the comparator output filter, when CR1[SE]=0. Setting FILT_PER to 0x0 disables the filter. Filter programming and latency details appear in the Functional description. This field has no effect when CR1[SE]=1. In that case, the external SAMPLE signal is used to determine the sampling period.

26.7.4 CMP Status and Control Register (CMPx_SCR)

Address: 4007_3000h base + 3h offset = 4007_3003h

Bit	7	6	5	4	3	2	1	0
Read	0	Reserved	0	IER	IEF	CFR	CFF	COUT
Write						w1c	w1c	
Reset	0	0	0	0	0	0	0	0

CMPx_SCR field descriptions

Field	Description
7 Reserved	This field is reserved. This read-only field is reserved and always has the value 0.
6 Reserved	This field is reserved. This bit must be written as 0.
5 Reserved	This field is reserved. This read-only field is reserved and always has the value 0.
4 IER	Comparator Interrupt Enable Rising Enables the CFR interrupt from the CMP. When this field is set, an interrupt will be asserted when CFR is set. 0 Interrupt is disabled. 1 Interrupt is enabled.
3 IEF	Comparator Interrupt Enable Falling

Table continues on the next page...

CMPx_SCR field descriptions (continued)

Field	Description
	Enables the CFF interrupt from the CMP. When this field is set, an interrupt will be asserted when CFF is set. 0 Interrupt is disabled. 1 Interrupt is enabled.
2 CFR	Analog Comparator Flag Rising Detects a rising-edge on COUT, when set, during normal operation. CFR is cleared by writing 1 to it. During Stop modes, CFR is level sensitive . 0 Rising-edge on COUT has not been detected. 1 Rising-edge on COUT has occurred.
1 CFF	Analog Comparator Flag Falling Detects a falling-edge on COUT, when set, during normal operation. CFF is cleared by writing 1 to it. During Stop modes, CFF is level sensitive . 0 Falling-edge on COUT has not been detected. 1 Falling-edge on COUT has occurred.
0 COUT	Analog Comparator Output Returns the current value of the Analog Comparator output, when read. The field is reset to 0 and will read as CR1[INV] when the Analog Comparator module is disabled, that is, when CR1[EN] = 0. Writes to this field are ignored.

26.7.5 DAC Control Register (CMPx_DACCR)

Address: 4007_3000h base + 4h offset = 4007_3004h

Bit	7	6	5	4	3	2	1	0
Read Write	DACEN	VRSEL	VOSEL					
Reset	0	0	0	0	0	0	0	0

CMPx_DACCR field descriptions

Field	Description
7 DACEN	DAC Enable Enables the DAC. When the DAC is disabled, it is powered down to conserve power. 0 DAC is disabled. 1 DAC is enabled.
6 VRSEL	Supply Voltage Reference Source Select 0 V is selected as resistor ladder network supply reference V_{in1in} 1 V is selected as resistor ladder network supply reference V_{in2in}
VOSEL	DAC Output Voltage Select Selects an output voltage from one of 64 distinct levels.

Table continues on the next page...

CMPx_DACCR field descriptions (continued)

Field	Description
	`DACO = (V in /64) * (VOSEL[5:0] + 1)` , so the DACO range is from V_{in} /64 to V_{in} .

26.7.6 MUX Control Register (CMPx_MUXCR)

Address: 4007_3000h base + 5h offset = 4007_3005h

Bit	7	6	5	4	3	2	1	0
Read Write	Reserved	0	PSEL			MSEL		
Reset	0	0	0	0	0	0	0	0

CMPx_MUXCR field descriptions

Field	Description
7 Reserved	Bit can be programmed to zero only . This field is reserved.
6 Reserved	This field is reserved. This read-only field is reserved and always has the value 0.
5–3 PSEL	Plus Input Mux Control Determines which input is selected for the plus input of the comparator. For INx inputs, see CMP, DAC, and ANMUX block diagrams. **NOTE:** When an inappropriate operation selects the same input for both muxes, the comparator automatically shuts down to prevent itself from becoming a noise generator. 000 IN0 001 IN1 010 IN2 011 IN3 100 IN4 101 IN5 110 IN6 111 IN7
MSEL	Minus Input Mux Control Determines which input is selected for the minus input of the comparator. For INx inputs, see CMP, DAC, and ANMUX block diagrams. **NOTE:** When an inappropriate operation selects the same input for both muxes, the comparator automatically shuts down to prevent itself from becoming a noise generator. 000 IN0 001 IN1 010 IN2 011 IN3 100 IN4 101 IN5

Table continues on the next page...

CMPx_MUXCR field descriptions (continued)

Field	Description
	110 IN6 111 IN7

26.8 Functional description

The CMP module can be used to compare two analog input voltages applied to INP and INM. CMPO is high when the non-inverting input is greater than the inverting input, and is low when the non-inverting input is less than the inverting input. This signal can be selectively inverted by setting CR1[INV] = 1.

SCR[IER] and SCR[IEF] are used to select the condition which will cause the CMP module to assert an interrupt to the processor. SCR[CFF] is set on a falling-edge and SCR[CFR] is set on rising-edge of the comparator output. The optionally filtered CMPO can be read directly through SCR[COUT].

26.8.1 CMP functional modes

There are three main sub-blocks to the CMP module:

- The comparator itself
- The window function
- The filter function

The filter, CR0[FILTER_CNT], can be clocked from an internal or external clock source. The filter is programmable with respect to the number of samples that must agree before a change in the output is registered. In the simplest case, only one sample must agree. In this case, the filter acts as a simple sampler.

The external sample input is enabled using CR1[SE]. When set, the output of the comparator is sampled only on rising edges of the sample input.

The "windowing mode" is enabled by setting CR1[WE]. When set, the comparator output is sampled only when WINDOW=1. This feature can be used to ignore the comparator output during time periods in which the input voltages are not valid. This is especially useful when implementing zero-crossing-detection for certain PWM applications.

The comparator filter and sampling features can be combined as shown in the following table. Individual modes are discussed below.

Table 26-15. Comparator sample/filter controls

Mode #	CR1[EN]	CR1[WE]	CR1[SE]	CR0[FILTER_CNT]	FPR[FILT_PER]	Operation
1	0	X	X	X	X	**Disabled** See the Disabled mode (# 1).
2A	1	0	0	0x00	X	**Continuous Mode** See the Continuous mode (#s 2A & 2B).
2B	1	0	0	X	0x00	
3A	1	0	1	0x01	X	**Sampled, Non-Filtered mode** See the Sampled, Non-Filtered mode (#s 3A & 3B).
3B	1	0	0	0x01	> 0x00	
4A	1	0	1	> 0x01	X	**Sampled, Filtered mode** See the Sampled, Filtered mode (#s 4A & 4B).
4B	1	0	0	> 0x01	> 0x00	
5A	1	1	0	0x00	X	**Windowed mode** Comparator output is sampled on every rising bus clock edge when SAMPLE=1 to generate COUTA. See the Windowed mode (#s 5A & 5B).
5B	1	1	0	X	0x00	
6	1	1	0	0x01	0x01–0xFF	**Windowed/Resampled mode** Comparator output is sampled on every rising bus clock edge when SAMPLE=1 to generate COUTA, which is then resampled on an interval determined by FILT_PER to generate COUT. See the Windowed/Resampled mode (# 6).
7	1	1	0	> 0x01	0x01–0xFF	**Windowed/Filtered mode** Comparator output is sampled on every rising bus clock edge when SAMPLE=1 to generate COUTA, which is then resampled and filtered to generate COUT. See the Windowed/Filtered mode (#7).
All other combinations of CR1[EN], CR1[WE], CR1[SE], CR0[FILTER_CNT], and FPR[FILT_PER] are illegal.						

For cases where a comparator is used to drive a fault input, for example, for a motor-control module such as FTM, it must be configured to operate in Continuous mode so that an external fault can immediately pass through the comparator to the target fault circuitry.

Note

Filtering and sampling settings must be changed only after setting CR1[SE]=0 and CR0[FILTER_CNT]=0x00. This resets the filter to a known state.

26.8.1.1 Disabled mode (# 1)

In Disabled mode, the analog comparator is non-functional and consumes no power. CMPO is 0 in this mode.

26.8.1.2 Continuous mode (#s 2A & 2B)

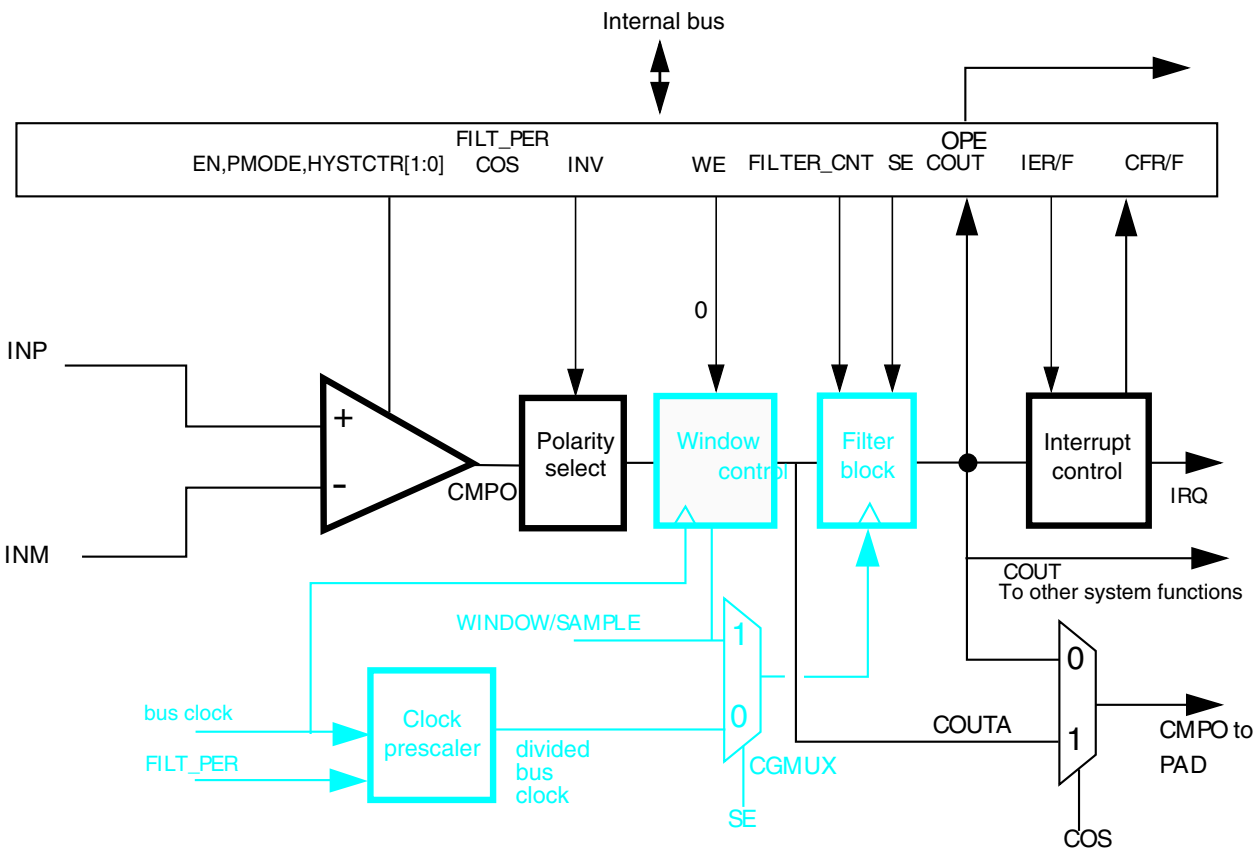

Figure 26-15. Comparator operation in Continuous mode

NOTE

See the chip configuration section for the source of sample/window input.

The analog comparator block is powered and active. CMPO may be optionally inverted, but is not subject to external sampling or filtering. Both window control and filter blocks are completely bypassed. SCR[COUT] is updated continuously. The path from comparator input pins to output pin is operating in combinational unclocked mode. COUT and COUTA are identical.

For control configurations which result in disabling the filter block, see the Filter Block Bypass Logic diagram.

26.8.1.3 Sampled, Non-Filtered mode (#s 3A & 3B)

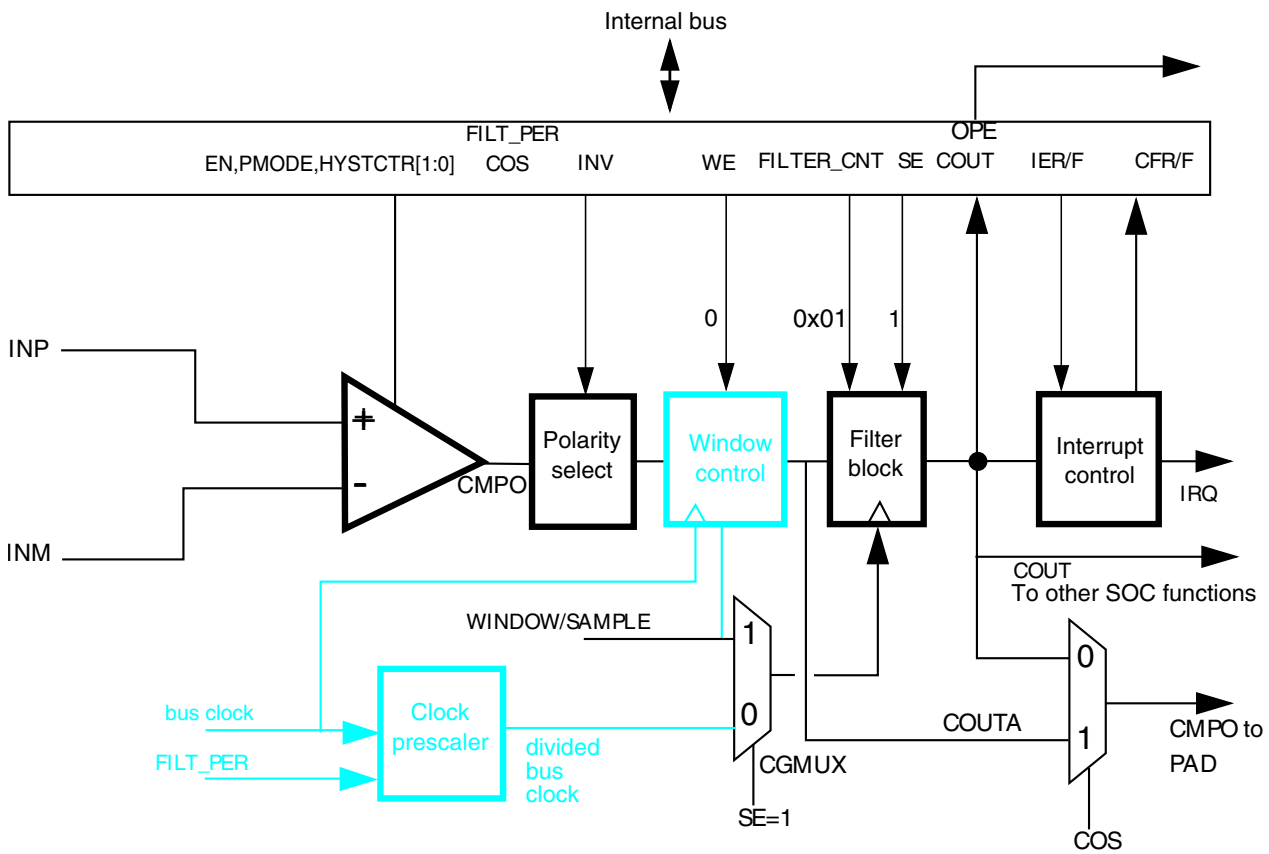

Figure 26-16. Sampled, Non-Filtered (# 3A): sampling point externally driven

In Sampled, Non-Filtered mode, the analog comparator block is powered and active. The path from analog inputs to COUTA is combinational unclocked. Windowing control is completely bypassed. COUTA is sampled whenever a rising-edge is detected on the filter block clock input.

The only difference in operation between Sampled, Non-Filtered (# 3A) and Sampled, Non-Filtered (# 3B) is in how the clock to the filter block is derived. In #3A, the clock to filter block is externally derived while in #3B, the clock to filter block is internally derived.

The comparator filter has no other function than sample/hold of the comparator output in this mode (# 3B).

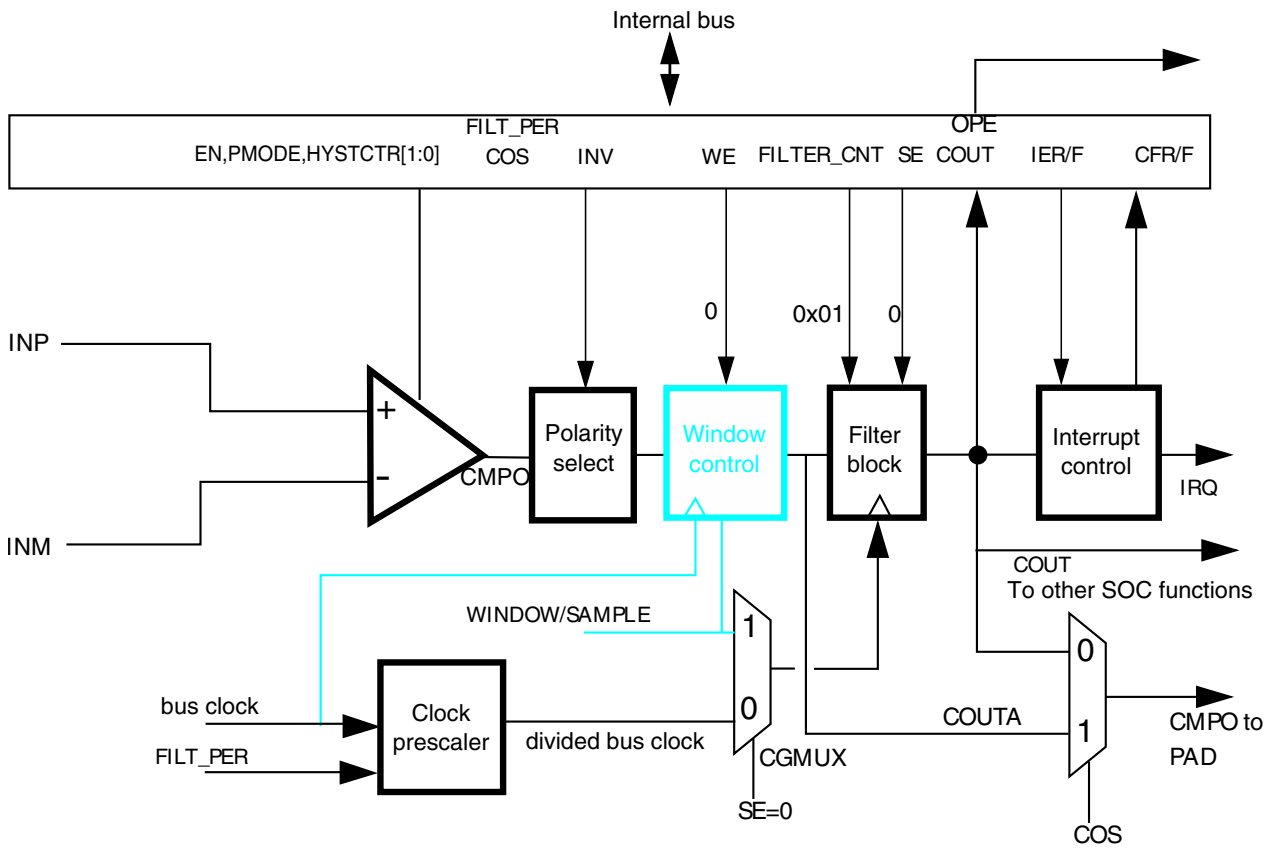

Figure 26-17. Sampled, Non-Filtered (# 3B): sampling interval internally derived

26.8.1.4 Sampled, Filtered mode (#s 4A & 4B)

In Sampled, Filtered mode, the analog comparator block is powered and active. The path from analog inputs to COUTA is combinational unclocked. Windowing control is completely bypassed. COUTA is sampled whenever a rising edge is detected on the filter block clock input.

The only difference in operation between Sampled, Non-Filtered (# 3A) and Sampled, Filtered (# 4A) is that, now, CR0[FILTER_CNT]>1, which activates filter operation.

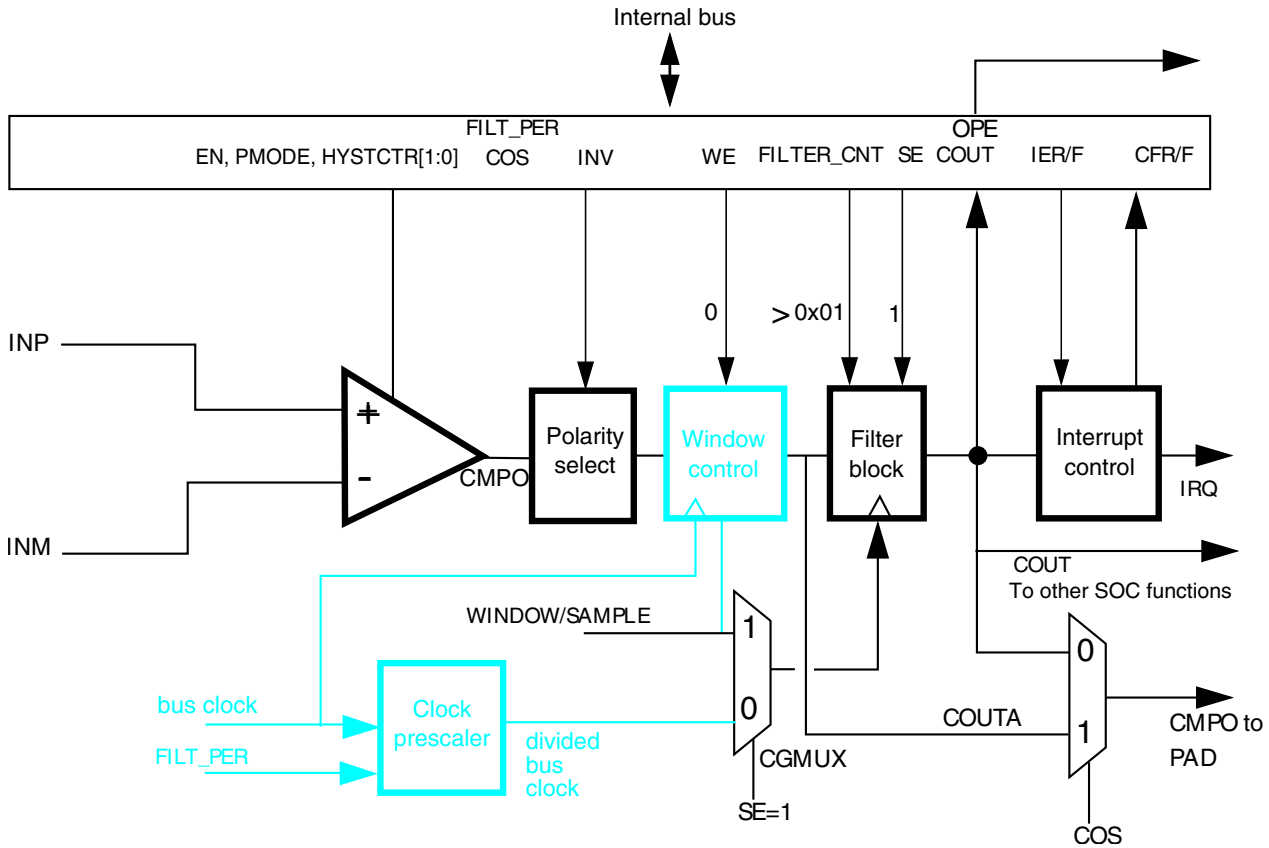

Figure 26-18. Sampled, Filtered (# 4A): sampling point externally driven

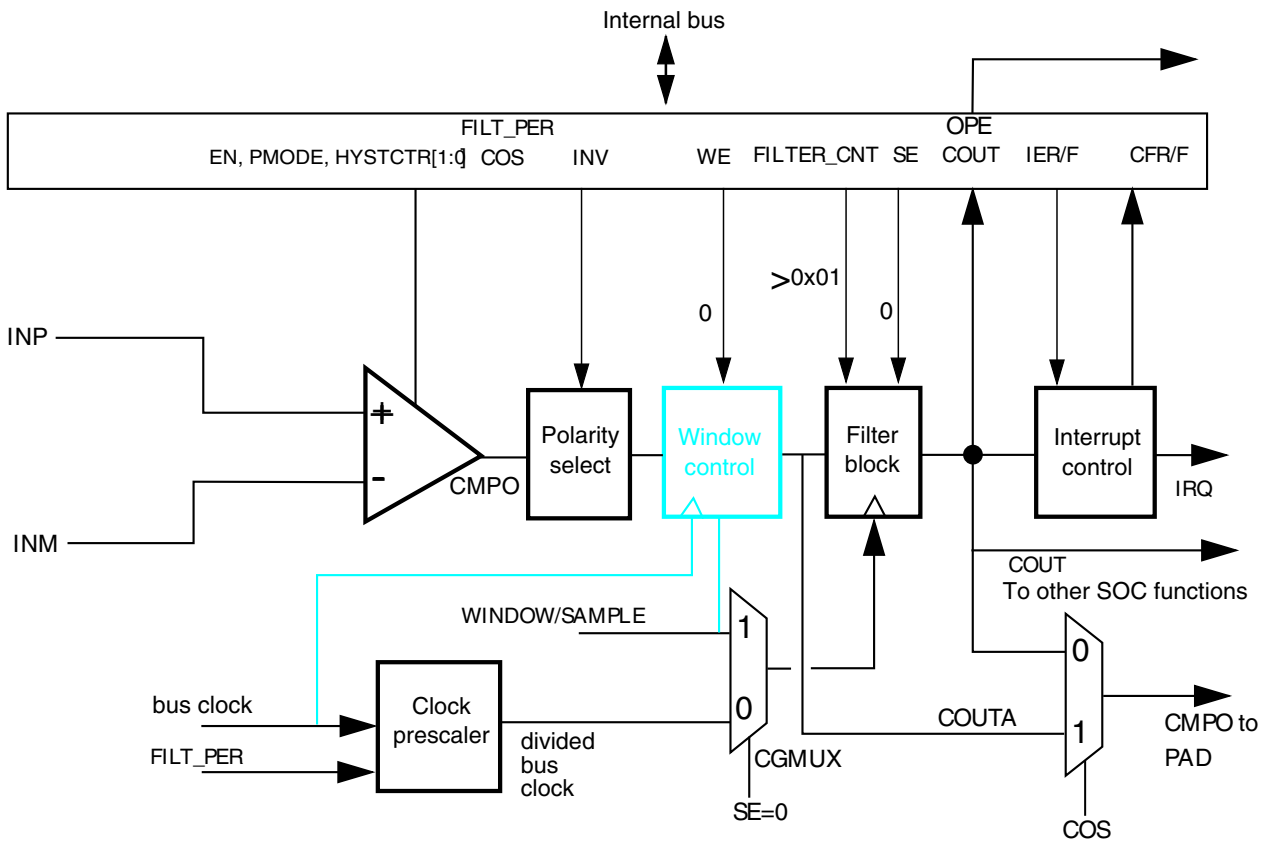

Figure 26-19. Sampled, Filtered (# 4B): sampling point internally derived

The only difference in operation between Sampled, Non-Filtered (# 3B) and Sampled, Filtered (# 4B) is that now, CR0[FILTER_CNT]>1, which activates filter operation.

26.8.1.5 Windowed mode (#s 5A & 5B)

The following figure illustrates comparator operation in the Windowed mode, ignoring latency of the analog comparator, polarity select, and window control block. It also assumes that the polarity select is set to non-inverting state.

NOTE

The analog comparator output is passed to COUTA only when the WINDOW signal is high.

In actual operation, COUTA may lag the analog inputs by up to one bus clock cycle plus the combinational path delay through the comparator and polarity select logic.

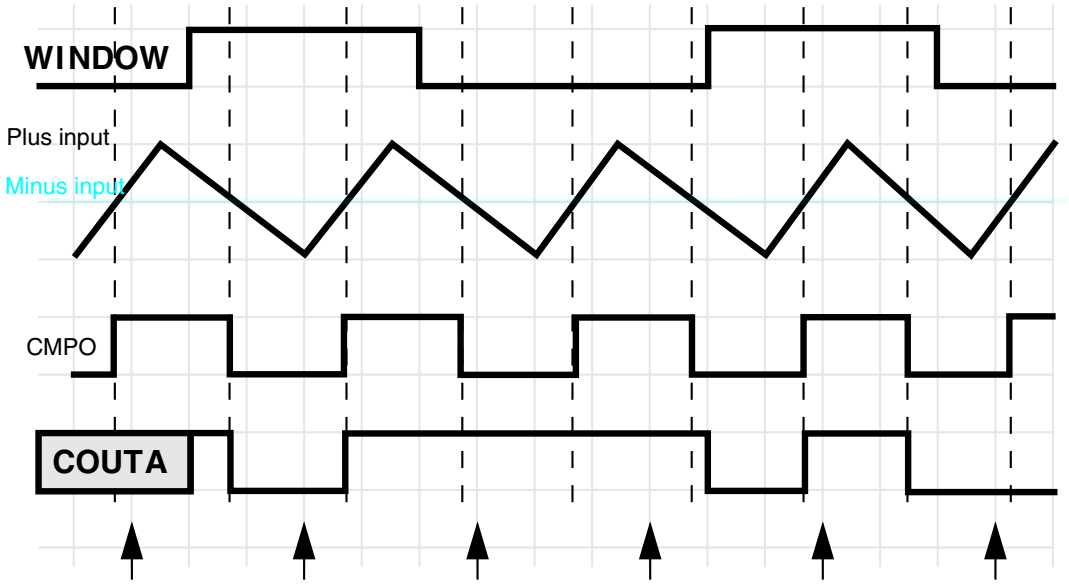

Figure 26-20. Windowed mode operation

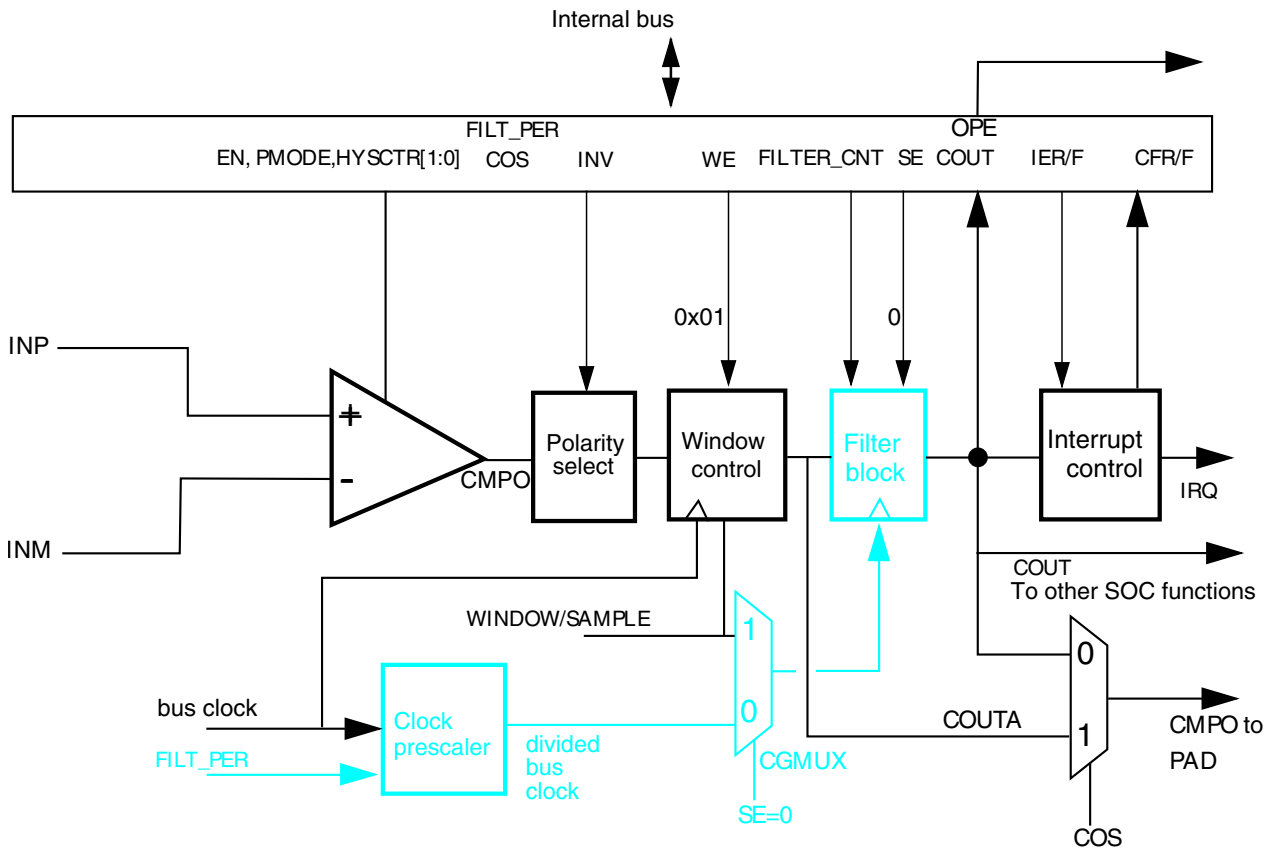

Figure 26-21. Windowed mode

For control configurations which result in disabling the filter block, see Filter Block Bypass Logic diagram.

When any windowed mode is active, COUTA is clocked by the bus clock whenever WINDOW = 1. The last latched value is held when WINDOW = 0.

26.8.1.6 Windowed/Resampled mode (# 6)

The following figure uses the same input stimulus shown in Figure 26-20, and adds resampling of COUTA to generate COUT. Samples are taken at the time points indicated by the arrows in the figure. Again, prop delays and latency are ignored for the sake of clarity.

This example was generated solely to demonstrate operation of the comparator in windowed/resampled mode, and does not reflect any specific application. Depending upon the sampling rate and window placement, COUT may not see zero-crossing events detected by the analog comparator. Sampling period and/or window placement must be carefully considered for a given application.

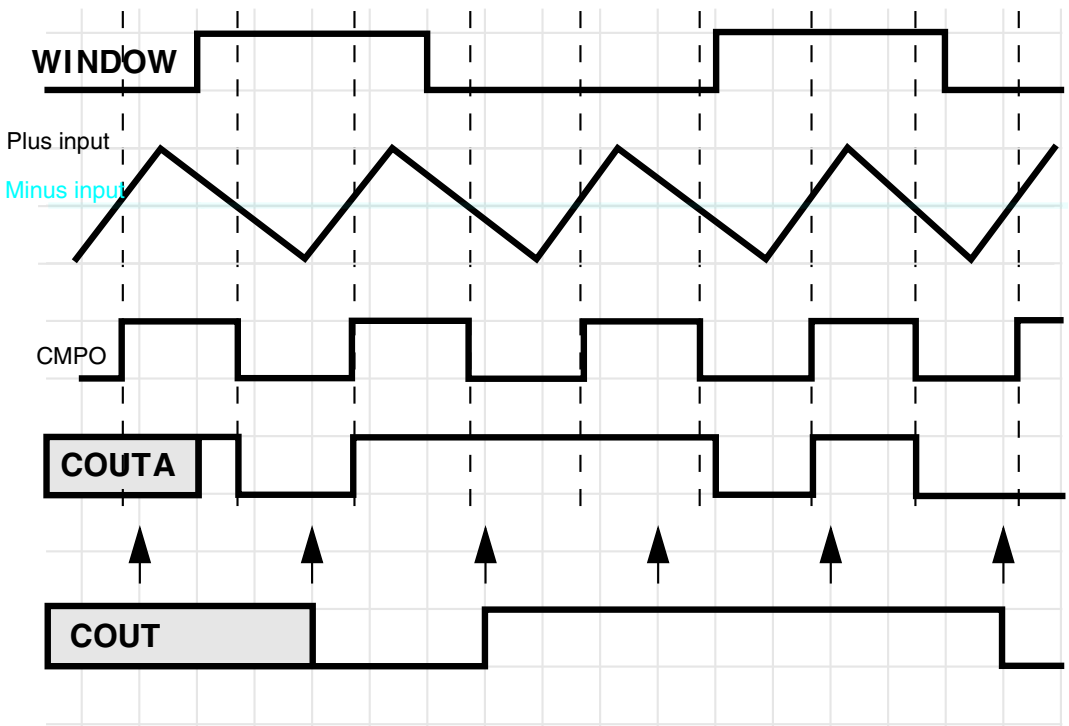

Figure 26-22. Windowed/resampled mode operation

This mode of operation results in an unfiltered string of comparator samples where the interval between the samples is determined by FPR[FILT_PER] and the bus clock rate. Configuration for this mode is virtually identical to that for the Windowed/Filtered Mode shown in the next section. The only difference is that the value of CR0[FILTER_CNT] must be 1.

26.8.1.7 Windowed/Filtered mode (#7)

This is the most complex mode of operation for the comparator block, as it uses both windowing and filtering features. It also has the highest latency of any of the modes. This can be approximated: up to 1 bus clock synchronization in the window function + ((CR0[FILTER_CNT] * FPR[FILT_PER]) + 1) * bus clock for the filter function.

When any windowed mode is active, COUTA is clocked by the bus clock whenever WINDOW = 1. The last latched value is held when WINDOW = 0.

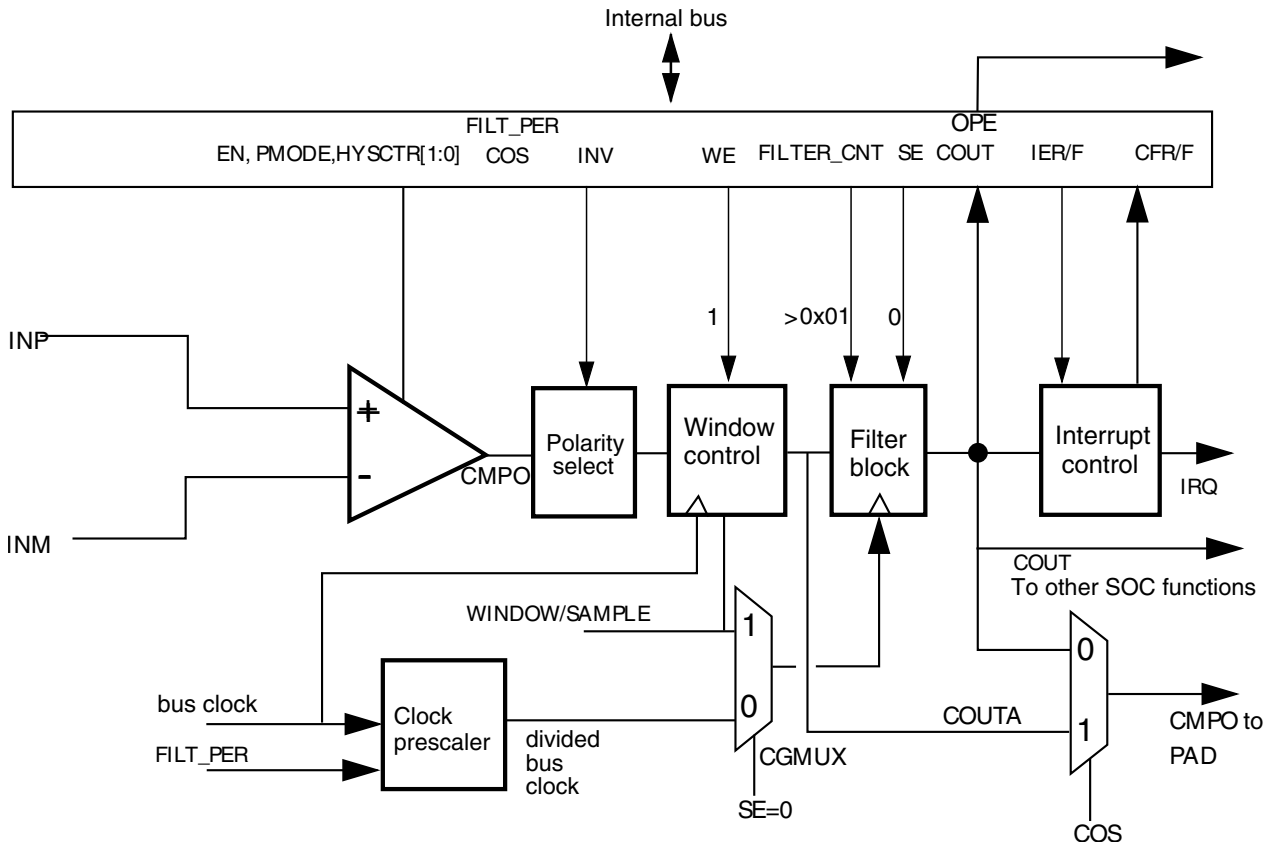

Figure 26-23. Windowed/Filtered mode

26.8.2 Power modes

26.8.2.1 Wait mode operation

During Wait and VLPW modes, the CMP, if enabled, continues to operate normally and a CMP interrupt can wake the MCU.

26.8.2.2 Stop mode operation

Depending on clock restrictions related to the MCU core or core peripherals, the MCU is brought out of stop when a compare event occurs and the corresponding interrupt is enabled. Similarly, if CR1[OPE] is enabled, the comparator output operates as in the normal operating mode and comparator output is placed onto the external pin. In Stop modes, the comparator can be operational in both:

- High-Speed (HS) Comparison mode when CR1[PMODE] = 1
- Low-Speed (LS) Comparison mode when CR1[PMODE] = 0

It is recommended to use the LS mode to minimize power consumption.

If stop is exited with a reset, all comparator registers are put into their reset state.

26.8.2.3 Background Debug Mode Operation

When the microcontroller is in active background debug mode, the CMP continues to operate normally.

26.8.3 Startup and operation

A typical startup sequence is as follows.

The time required to stabilize COUT will be the power-on delay of the comparators plus the largest propagation delay from a selected analog source through the analog comparator, windowing function and filter. See the Data Sheets for power-on delays of the comparators. The windowing function has a maximum of one bus clock period delay. The filter delay is specified in the Low-pass filter.

During operation, the propagation delay of the selected data paths must always be considered. It may take many bus clock cycles for COUT and SCR[CFR]/SCR[CFF] to reflect an input change or a configuration change to one of the components involved in the data path.

When programmed for filtering modes, COUT will initially be equal to 0, until sufficient clock cycles have elapsed to fill all stages of the filter. This occurs even if COUTA is at a logic 1.

26.8.4 Low-pass filter

The low-pass filter operates on the unfiltered and unsynchronized and optionally inverted comparator output COUTA and generates the filtered and synchronized output COUT. Both COUTA and COUT can be configured as module outputs and are used for different purposes within the system.

Synchronization and edge detection are always used to determine status register bit values. They also apply to COUT for all sampling and windowed modes. Filtering can be performed using an internal timebase defined by FPR[FILT_PER], or using an external SAMPLE input to determine sample time.

The need for digital filtering and the amount of filtering is dependent on user requirements. Filtering can become more useful in the absence of an external hysteresis circuit. Without external hysteresis, high-frequency oscillations can be generated at COUTA when the selected INM and INP input voltages differ by less than the offset voltage of the differential comparator.

26.8.4.1 Enabling filter modes

Filter modes can be enabled by:

- Setting CR0[FILTER_CNT] > 0x01 and
- Setting FPR[FILT_PER] to a nonzero value or setting CR1[SE]=1

If using the divided bus clock to drive the filter, it will take samples of COUTA every FPR[FILT_PER] bus clock cycles.

The filter output will be at logic 0 when first initalized, and will subsequently change when all the consecutive CR0[FILTER_CNT] samples agree that the output value has changed. In other words, SCR[COUT] will be 0 for some initial period, even when COUTA is at logic 1.

Setting both CR1[SE] and FPR[FILT_PER] to 0 disables the filter and eliminates switching current associated with the filtering process.

Note

Always switch to this setting prior to making any changes in filter parameters. This resets the filter to a known state. Switching CR0[FILTER_CNT] on the fly without this intermediate step can result in unexpected behavior.

If CR1[SE]=1, the filter takes samples of COUTA on each positive transition of the sample input. The output state of the filter changes when all the consecutive CR0[FILTER_CNT] samples agree that the output value has changed.

26.8.4.2 Latency issues

The value of FPR[FILT_PER] or SAMPLE period must be set such that the sampling period is just longer than the period of the expected noise. This way a noise spike will corrupt only one sample. The value of CR0[FILTER_CNT] must be chosen to reduce the probability of noisy samples causing an incorrect transition to be recognized. The probability of an incorrect transition is defined as the probability of an incorrect sample raised to the power of CR0[FILTER_CNT].

The values of FPR[FILT_PER] or SAMPLE period and CR0[FILTER_CNT] must also be traded off against the desire for minimal latency in recognizing actual comparator output transitions. The probability of detecting an actual output change within the nominal latency is the probability of a correct sample raised to the power of CR0[FILTER_CNT].

The following table summarizes maximum latency values for the various modes of operation *in the absence of noise*. Filtering latency is restarted each time an actual output transition is masked by noise.

Table 26-16. Comparator sample/filter maximum latencies

Mode #	CR1[EN]	CR1[WE]	CR1[SE]	CR0[FILTER_CNT]	FPR[FILT_PER]	Operation	Maximum latency[1]
1	0	X	X	X	X	Disabled	N/A
2A	1	0	0	0x00	X	Continuous Mode	T_{PD}
2B	1	0	0	X	0x00		
3A	1	0	1	0x01	X	Sampled, Non-Filtered mode	$T_{PD} + T_{SAMPLE} + T_{per}$
3B	1	0	0	0x01	> 0x00		T_{PD} + (FPR[FILT_PER] * T_{per}) + T_{per}
4A	1	0	1	> 0x01	X	Sampled, Filtered mode	T_{PD} + (CR0[FILTER_CNT] * T_{SAMPLE}) + T_{per}
4B	1	0	0	> 0x01	> 0x00		T_{PD} + (CR0[FILTER_CNT] * FPR[FILT_PER] x T_{per}) + T_{per}
5A	1	1	0	0x00	X	Windowed mode	$T_{PD} + T_{per}$
5B	1	1	0	X	0x00		$T_{PD} + T_{per}$
6	1	1	0	0x01	0x01 - 0xFF	Windowed / Resampled mode	T_{PD} + (FPR[FILT_PER] * T_{per}) + $2T_{per}$
7	1	1	0	> 0x01	0x01 - 0xFF	Windowed / Filtered mode	T_{PD} + (CR0[FILTER_CNT] * FPR[FILT_PER] x T_{per}) + $2T_{per}$

1. T_{PD} represents the intrinsic delay of the analog component plus the polarity select logic. T_{SAMPLE} is the clock period of the external sample clock. T_{per} is the period of the bus clock.

26.9 CMP interrupts

The CMP module is capable of generating an interrupt on either the rising- or falling-edge of the comparator output, or both. The following table gives the conditions in which the interrupt request is asserted and deasserted.

When	Then
SCR[IER] and SCR[CFR] are set	The interrupt request is asserted
SCR[IEF] and SCR[CFF] are set	The interrupt request is asserted
SCR[IER] and SCR[CFR] are cleared for a rising-edge interrupt	The interrupt request is deasserted
SCR[IEF] and SCR[CFF] are cleared for a falling-edge interrupt	The interrupt request is deasserted

26.10 Digital-to-analog converter

The following figure shows the block diagram of the DAC module. It contains a 64-tap resistor ladder network and a 64-to-1 multiplexer, which selects an output voltage from one of 64 distinct levels that outputs from DACO. It is controlled through the DAC Control Register (DACCR). Its supply reference source can be selected from two sources V_{in1} and V_{in2}. The module can be powered down or disabled when not in use. When in Disabled mode, DACO is connected to the analog ground.

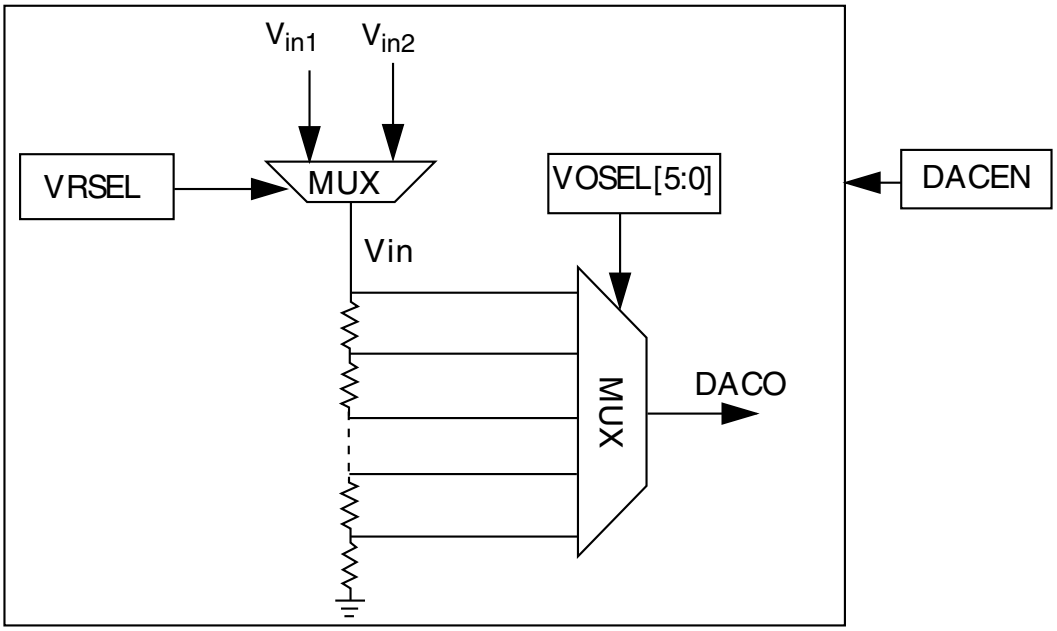

Figure 26-24. 6-bit DAC block diagram

26.11 DAC functional description

This section provides DAC functional description.

26.11.1 Voltage reference source select

- V_{in1} connects to the primary voltage source as supply reference of 64 tap resistor ladder
- V_{in2} connects to an alternate voltage source

26.12 DAC resets

This module has a single reset input, corresponding to the chip-wide peripheral reset.

26.13 DAC clocks

This module has a single clock input, the bus clock.

26.14 DAC interrupts

This module has no interrupts.

26.15 CMP Trigger Mode

CMP and DAC are configured to CMP Trigger mode when CMP_CR1[TRIGM] is set to 1. In addition, the CMP must be enabled. If the DAC is to be used as a reference to the CMP, it must also be enabled.

CMP Trigger mode depends on an external timer resource to periodically enable the CMP and 6-bit DAC in order to generate a triggered compare.

Upon setting TRIGM, the CMP and DAC are placed in a standby state until an external timer resource trigger is received.

See the chip configuration chapter for details about the external timer resource.

Chapter 27
Timer/PWM Module (TPM)

27.1 Introduction

The TPM (Timer/PWM Module) is a two to eight channel timer which supports input capture, output compare, and the generation of PWM signals to control electric motor and power management applications. The counter, compare and capture registers are clocked by an asynchronous clock that can remain enabled in low power modes.

27.1.1 TPM Philosophy

The TPM is built upon a very simple timer (HCS08 Timer PWM Module – TPM) used for many years on Freescale's 8-bit microcontrollers. The TPM extends the functionality to support operation in low power modes by clocking the counter, compare and capture registers from an asynchronous clock that can remain functional in low power modes.

27.1.2 Features

The TPM features include:

- TPM clock mode is selectable
  - Can increment on every edge of the asynchronous counter clock
  - Can increment on rising edge of an external clock input synchronized to the asynchronous counter clock
- Prescaler divide-by 1, 2, 4, 8, 16, 32, 64, or 128
- TPM includes a 16-bit counter

  - It can be a free-running counter or modulo counter
  - The counting can be up or up-down
- Includes 2 channels that can be configured for input capture, output compare, or edge-aligned PWM mode
  - In input capture mode the capture can occur on rising edges, falling edges or both edges
  - In output compare mode the output signal can be set, cleared, pulsed, or toggled on match
  - All channels can be configured for center-aligned PWM mode
- Support the generation of an interrupt per channel
- Support the generation of an interrupt when the counter overflows
- Support selectable trigger input to optionally reset or cause the counter to start incrementing.
  - The counter can also optionally stop incrementing on counter overflow
- Support the generation of hardware triggers when the counter overflows and per channel

27.1.3 Modes of Operation

During debug mode, the TPM can can be configured to temporarily pause all counting until the core returns to normal user operating mode or to operate normally. When the counter is paused, trigger inputs and input capture events are ignored.

During doze mode, the TPM can be configured to operate normally or to pause all counting for the duration of doze mode. When the counter is paused, trigger inputs and input capture events are ignored.

During stop mode, the TPM counter clock can remain functional and the TPM can generate an asynchronous interrupt to exit the MCU from stop mode.

27.1.4 Block Diagram

The TPM uses one input/output (I/O) pin per channel, CHn (TPM channel (n)) where n is the channel number.

The following figure shows the TPM structure. The central component of the TPM is the 16-bit counter with programmable final value and its counting can be up or up-down.

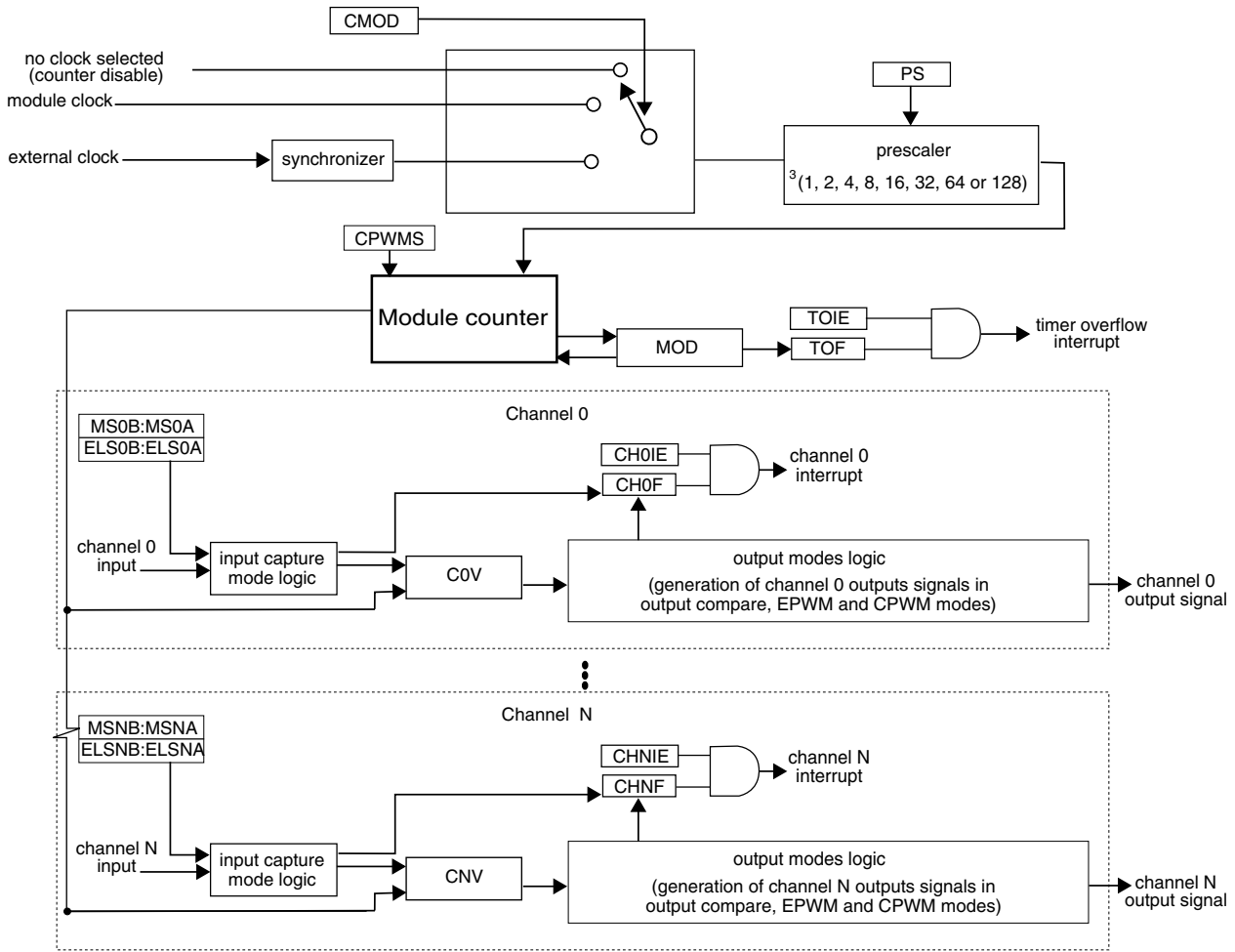

Figure 27-1. TPM block diagram

27.2 TPM Signal Descriptions

Table 27-1 shows the user-accessible signals for the TPM.

Table 27-1. TPM signal descriptions

Signal	Description	I/O
TPM_EXTCLK	External clock. TPM external clock can be selected to increment the TPM counter on every rising edge synchronized to the counter clock.	I
TPM_CHn	TPM channel (n = 1 to 0)	I/O

27.2.1 TPM_EXTCLK — TPM External Clock

The rising edge of the external input signal is used to increment the TPM counter if selected by CMOD[1:0] bits in the SC register. This input signal must be less than half of the TPM counter clock frequency. The TPM counter prescaler selection and settings are also used when an external input is selected.

27.2.2 TPM_CHn — TPM Channel (n) I/O Pin

Each TPM channel can be configured to operate either as input or output. The direction associated with each channel, input or output, is selected according to the mode assigned for that channel.

27.3 Memory Map and Register Definition

This section provides a detailed description of all TPM registers.

Attempting to access a reserved register location in the TPM memory map will generate a bus error.

TPM memory map

Absolute address (hex)	Register name	Width (in bits)	Access	Reset value	Section/ page
4003_8000	Status and Control (TPM0_SC)	32	R/W	0000_0000h	27.3.1/415
4003_8004	Counter (TPM0_CNT)	32	R/W	0000_0000h	27.3.2/416
4003_8008	Modulo (TPM0_MOD)	32	R/W	0000_FFFFh	27.3.3/417
4003_800C	Channel (n) Status and Control (TPM0_C0SC)	32	R/W	0000_0000h	27.3.4/418
4003_8010	Channel (n) Value (TPM0_C0V)	32	R/W	0000_0000h	27.3.5/419
4003_8014	Channel (n) Status and Control (TPM0_C1SC)	32	R/W	0000_0000h	27.3.4/418
4003_8018	Channel (n) Value (TPM0_C1V)	32	R/W	0000_0000h	27.3.5/419
4003_8050	Capture and Compare Status (TPM0_STATUS)	32	R/W	0000_0000h	27.3.6/420
4003_8084	Configuration (TPM0_CONF)	32	R/W	0000_0000h	27.3.7/422
4003_9000	Status and Control (TPM1_SC)	32	R/W	0000_0000h	27.3.1/415
4003_9004	Counter (TPM1_CNT)	32	R/W	0000_0000h	27.3.2/416
4003_9008	Modulo (TPM1_MOD)	32	R/W	0000_FFFFh	27.3.3/417
4003_900C	Channel (n) Status and Control (TPM1_C0SC)	32	R/W	0000_0000h	27.3.4/418
4003_9010	Channel (n) Value (TPM1_C0V)	32	R/W	0000_0000h	27.3.5/419
4003_9014	Channel (n) Status and Control (TPM1_C1SC)	32	R/W	0000_0000h	27.3.4/418
4003_9018	Channel (n) Value (TPM1_C1V)	32	R/W	0000_0000h	27.3.5/419

Table continues on the next page...

TPM memory map (continued)

Absolute address (hex)	Register name	Width (in bits)	Access	Reset value	Section/ page
4003_9050	Capture and Compare Status (TPM1_STATUS)	32	R/W	0000_0000h	27.3.6/420
4003_9084	Configuration (TPM1_CONF)	32	R/W	0000_0000h	27.3.7/422

27.3.1 Status and Control (TPMx_SC)

SC contains the overflow status flag and control bits used to configure the interrupt enable, module configuration and prescaler factor. These controls relate to all channels within this module.

Address: Base address + 0h offset

Bit	31	30	29	28	27	26	25	24	23	22	21	20	19	18	17	16
R	0															
W																
Reset	0	0	0	0	0	0	0	0	0	0	0	0	0	0	0	0

Bit	15	14	13	12	11	10	9	8	7	6	5	4	3	2	1	0
R	0								TOF	TOIE	CPWMS	CMOD		PS		
W									w1c							
Reset	0	0	0	0	0	0	0	0	0	0	0	0	0	0	0	0

TPMx_SC field descriptions

Field	Description
31–8 Reserved	This field is reserved. This read-only field is reserved and always has the value 0.
7 TOF	Timer Overflow Flag Set by hardware when the TPM counter equals the value in the MOD register and increments. The TOF bit is cleared by writing a 1 to TOF bit. Writing a 0 to TOF has no effect.

Table continues on the next page...

TPMx_SC field descriptions (continued)

Field	Description
	If another LPTPM overflow occurs between the flag setting and the flag clearing, the write operation has no effect; therefore, TOF remains set indicating another overflow has occurred. In this case a TOF interrupt request is not lost due to a delay in clearing the previous TOF. 0 TPM counter has not overflowed. 1 TPM counter has overflowed.
6 TOIE	Timer Overflow Interrupt Enable Enables TPM overflow interrupts. 0 Disable TOF interrupts. Use software polling. 1 Enable TOF interrupts. An interrupt is generated when TOF equals one.
5 CPWMS	Center-aligned PWM Select Selects CPWM mode. This mode configures the TPM to operate in up-down counting mode. This field is write protected. It can be written only when the counter is disabled. 0 TPM counter operates in up counting mode. 1 TPM counter operates in up-down counting mode.
4–3 CMOD	Clock Mode Selection Selects the TPM counter clock modes. When disabling the counter, this field remain set until acknolwedged in the TPM clock domain. 00 TPM counter is disabled 01 TPM counter increments on every TPM counter clock 10 TPM counter increments on rising edge of TPM_EXTCLK synchronized to the TPM counter clock 11 Reserved
PS	Prescale Factor Selection Selects one of 8 division factors for the clock mode selected by CMOD. This field is write protected. It can be written only when the counter is disabled. 000 Divide by 1 001 Divide by 2 010 Divide by 4 011 Divide by 8 100 Divide by 16 101 Divide by 32 110 Divide by 64 111 Divide by 128

27.3.2 Counter (TPMx_CNT)

The CNT register contains the TPM counter value.

Reset clears the CNT register. Writing any value to COUNT also clears the counter.

When debug is active, the TPM counter does not increment unless configured otherwise.

Reading the CNT register adds two wait states to the register access due to synchronization delays.

Address: Base address + 4h offset

Bit	31	30	29	28	27	26	25	24	23	22	21	20	19	18	17	16	15	14	13	12	11	10	9	8	7	6	5	4	3	2	1	0
R	0																COUNT															
W																																
Reset	0	0	0	0	0	0	0	0	0	0	0	0	0	0	0	0	0	0	0	0	0	0	0	0	0	0	0	0	0	0	0	0

TPMx_CNT field descriptions

Field	Description
31–16 Reserved	This field is reserved. This read-only field is reserved and always has the value 0.
COUNT	Counter value

27.3.3 Modulo (TPMx_MOD)

The Modulo register contains the modulo value for the TPM counter. When the TPM counter reaches the modulo value and increments, the overflow flag (TOF) is set and the next value of TPM counter depends on the selected counting method (see Counter).

Writing to the MOD register latches the value into a buffer. The MOD register is updated with the value of its write buffer according to MOD Register Update . Additional writes to the MOD write buffer are ignored until the register has been updated.

It is recommended to initialize the TPM counter (write to CNT) before writing to the MOD register to avoid confusion about when the first counter overflow will occur.

Address: Base address + 8h offset

Bit	31	30	29	28	27	26	25	24	23	22	21	20	19	18	17	16	15	14	13	12	11	10	9	8	7	6	5	4	3	2	1	0
R	0																MOD															
W																																
Reset	0	0	0	0	0	0	0	0	0	0	0	0	0	0	0	0	1	1	1	1	1	1	1	1	1	1	1	1	1	1	1	1

TPMx_MOD field descriptions

Field	Description
31–16 Reserved	This field is reserved. This read-only field is reserved and always has the value 0.
MOD	Modulo value When writing this field, all bytes must be written at the same time.

27.3.4 Channel (n) Status and Control (TPMx_C*n*SC)

CnSC contains the channel-interrupt-status flag and control bits used to configure the interrupt enable, channel configuration, and pin function. When switching from one channel mode to a different channel mode, the channel must first be disabled and this must be acknowledged in the TPM counter clock domain.

Table 27-24. Mode, Edge, and Level Selection

CPWMS	MSnB:MSnA	ELSnB:ELSnA	Mode	Configuration
X	00	00	None	Channel disabled
X	01	00	Software compare	Pin not used for TPM
0	00	01	Input capture	Capture on Rising Edge Only
		10		Capture on Falling Edge Only
		11		Capture on Rising or Falling Edge
	01	01	Output compare	Toggle Output on match
		10		Clear Output on match
		11		Set Output on match
	10	10	Edge-aligned PWM	High-true pulses (clear Output on match, set Output on reload)
		X1		Low-true pulses (set Output on match, clear Output on reload)
	11	10	Output compare	Pulse Output low on match
		01		Pulse Output high on match
1	10	10	Center-aligned PWM	High-true pulses (clear Output on match-up, set Output on match-down)
		01		Low-true pulses (set Output on match-up, clear Output on match-down)

Address: Base address + Ch offset + (8d × i), where i=0d to 1d

Bit	31	30	29	28	27	26	25	24	23	22	21	20	19	18	17	16
R	0															
W																
Reset	0	0	0	0	0	0	0	0	0	0	0	0	0	0	0	0

Bit	15	14	13	12	11	10	9	8	7	6	5	4	3	2	1	0
R	0								CHF	CHIE	MSB	MSA	ELSB	ELSA	0	
W									w1c							
Reset	0	0	0	0	0	0	0	0	0	0	0	0	0	0	0	0

TPMx_C*n*SC field descriptions

Field	Description
31–8 Reserved	This field is reserved. This read-only field is reserved and always has the value 0.
7 CHF	Channel Flag Set by hardware when an event occurs on the channel. CHF is cleared by writing a 1 to the CHF bit. Writing a 0 to CHF has no effect. If another event occurs between the CHF sets and the write operation, the write operation has no effect; therefore, CHF remains set indicating another event has occurred. In this case a CHF interrupt request is not lost due to the delay in clearing the previous CHF. 0 No channel event has occurred. 1 A channel event has occurred.
6 CHIE	Channel Interrupt Enable Enables channel interrupts. 0 Disable channel interrupts. 1 Enable channel interrupts.
5 MSB	Channel Mode Select Used for further selections in the channel logic. Its functionality is dependent on the channel mode. When a channel is disabled, this bit will not change state until acknowledged in the TPM counter clock domain.
4 MSA	Channel Mode Select Used for further selections in the channel logic. Its functionality is dependent on the channel mode. When a channel is disabled, this bit will not change state until acknowledged in the TPM counter clock domain.
3 ELSB	Edge or Level Select The functionality of ELSB and ELSA depends on the channel mode. When a channel is disabled, this bit will not change state until acknowledged in the TPM counter clock domain.
2 ELSA	Edge or Level Select The functionality of ELSB and ELSA depends on the channel mode. When a channel is disabled, this bit will not change state until acknowledged in the TPM counter clock domain.
Reserved	This field is reserved. This read-only field is reserved and always has the value 0.

27.3.5 Channel (n) Value (TPMx_C*n*V)

These registers contain the captured TPM counter value for the input modes or the match value for the output modes.

In input capture mode, any write to a CnV register is ignored.

In compare modes, writing to a CnV register latches the value into a buffer. A CnV register is updated with the value of its write buffer according to CnV Register Update . Additional writes to the CnV write buffer are ignored until the register has been updated.

Address: Base address + 10h offset + (8d × i), where i=0d to 1d

Bit	31	30	29	28	27	26	25	24	23	22	21	20	19	18	17	16	15	14	13	12	11	10	9	8	7	6	5	4	3	2	1	0
R	0																VAL															
W																																
Reset	0	0	0	0	0	0	0	0	0	0	0	0	0	0	0	0	0	0	0	0	0	0	0	0	0	0	0	0	0	0	0	0

TPMx_C*n*V field descriptions

Field	Description
31–16 Reserved	This field is reserved. This read-only field is reserved and always has the value 0.
VAL	Channel Value Captured TPM counter value of the input modes or the match value for the output modes. When writing this field, all bytes must be written at the same time.

27.3.6 Capture and Compare Status (TPMx_STATUS)

The STATUS register contains a copy of the status flag CHnF bit (in CnSC) for each TPM channel, as well as the TOF bit (in SC), for software convenience.

Each CHnF bit in STATUS is a mirror of CHnF bit in CnSC. All CHnF bits can be checked using only one read of STATUS. All CHnF bits can be cleared by writing all ones to STATUS.

Hardware sets the individual channel flags when an event occurs on the channel. CHF is cleared by writing a 1 to the CHF bit. Writing a 0 to CHF has no effect.

If another event occurs between the flag setting and the write operation, the write operation has no effect; therefore, CHF remains set indicating another event has occurred. In this case a CHF interrupt request is not lost due to the clearing sequence for a previous CHF.

Address: Base address + 50h offset

Bit	31	30	29	28	27	26	25	24	23	22	21	20	19	18	17	16
R	0															
W																
Reset	0	0	0	0	0	0	0	0	0	0	0	0	0	0	0	0

Bit	15	14	13	12	11	10	9	8	7	6	5	4	3	2	1	0
R	0							TOF	0						CH1F	CH0F
W								w1c							w1c	w1c
Reset	0	0	0	0	0	0	0	0	0	0	0	0	0	0	0	0

TPMx_STATUS field descriptions

Field	Description
31–9 Reserved	This field is reserved. This read-only field is reserved and always has the value 0.
8 TOF	Timer Overflow Flag See register description 0 TPM counter has not overflowed. 1 TPM counter has overflowed.
7–2 Reserved	This field is reserved. This read-only field is reserved and always has the value 0.
1 CH1F	Channel 1 Flag See the register description. 0 No channel event has occurred. 1 A channel event has occurred.
0 CH0F	Channel 0 Flag See the register description. 0 No channel event has occurred. 1 A channel event has occurred.

27.3.7 Configuration (TPMx_CONF)

This register selects the behavior in debug and wait modes and the use of an external global time base.

Address: Base address + 84h offset

Bit	31	30	29	28	27	26	25	24	23	22	21	20	19	18	17	16
R	0				TRGSEL				0					CROT	CSOO	CSOT
W																
Reset	0	0	0	0	0	0	0	0	0	0	0	0	0	0	0	0

Bit	15	14	13	12	11	10	9	8	7	6	5	4	3	2	1	0
R	0						GTBEEN	0	DBGMODE		DOZEEN	0				
W																
Reset	0	0	0	0	0	0	0	0	0	0	0	0	0	0	0	0

TPMx_CONF field descriptions

Field	Description
31–28 Reserved	This field is reserved. This read-only field is reserved and always has the value 0.
27–24 TRGSEL	Trigger Select Selects the input trigger to use for starting the counter and/or reloading the counter. This field should only be changed when the TPM counter is disabled. See Chip configuration section for available options.
23–19 Reserved	This field is reserved. This read-only field is reserved and always has the value 0.
18 CROT	Counter Reload On Trigger When set, the TPM counter will reload with zero (and initialize PWM outputs to their default value) when a rising edge is detected on the selected trigger input. The trigger input is ignored if the TPM counter is paused during debug mode or doze mode. This field should only be changed when the TPM counter is disabled. 0 Counter is not reloaded due to a rising edge on the selected input trigger 1 Counter is reloaded when a rising edge is detected on the selected input trigger
17 CSOO	Counter Stop On Overflow When set, the TPM counter will stop incrementing once the counter equals the MOD value and incremented (this also sets the TOF). Reloading the counter with zero due to writing to the counter register or due to a trigger input does not cause the counter to stop incrementing. Once the counter has stopped incrementing, the counter will not start incrementing unless it is disabled and then enabled again, or a rising edge on the selected trigger input is detected when CSOT set.

Table continues on the next page...

TPMx_CONF field descriptions (continued)

Field	Description
	This field should only be changed when the TPM counter is disabled. 0 TPM counter continues incrementing or decrementing after overflow 1 TPM counter stops incrementing or decrementing after overflow.
16 CSOT	Counter Start on Trigger When set, the TPM counter will not start incrementing after it is enabled until a rising edge on the selected trigger input is detected. If the TPM counter is stopped due to an overflow, a rising edge on the selected trigger input will also cause the TPM counter to start incrementing again. The trigger input is ignored if the TPM counter is paused during debug mode or doze mode. This field should only be changed when the TPM counter is disabled. 0 TPM counter starts to increment immediately, once it is enabled. 1 TPM counter only starts to increment when it a rising edge on the selected input trigger is detected, after it has been enabled or after it has stopped due to overflow.
15–10 Reserved	This field is reserved. This read-only field is reserved and always has the value 0.
9 GTBEEN	Global time base enable Configures the TPM to use an externally generated global time base counter. When an externally generated timebase is used, the internal TPM counter is not used by the channels but can be used to generate a periodic interrupt using the Modulo register and timer overflow flag. 0 All channels use the internally generated TPM counter as their timebase 1 All channels use an externally generated global timebase as their timebase
8 Reserved	This field is reserved. This read-only field is reserved and always has the value 0.
7–6 DBGMODE	Debug Mode Configures the TPM behavior in debug mode. All other configurations are reserved. 00 TPM counter is paused and does not increment during debug mode. Trigger inputs and input capture events are also ignored. 11 TPM counter continues in debug mode.
5 DOZEEN	Doze Enable Configures the TPM behavior in wait mode. 0 Internal TPM counter continues in Doze mode. 1 Internal TPM counter is paused and does not increment during Doze mode. Trigger inputs and input capture events are also ignored.
Reserved	This field is reserved. This read-only field is reserved and always has the value 0.

27.4 Functional Description

The following sections describe the TPM features.

27.4.1 Clock Domains

The TPM module supports two clock domains.

The bus clock domain is used by the register interface and for synchronizing interrupts.

The TPM counter clock domain is used to clock the counter and prescaler along with the output compare and input capture logic. The TPM counter clock is considered asynchronous to the bus clock, can be a higher or lower frequency than the bus clock and can remain operational in Stop mode. Multiple TPM instances are all clocked by the same TPM counter clock in support of the external timebase feature.

27.4.1.1 Counter Clock Mode

The CMOD[1:0] bits in the SC register either disable the TPM counter or select one of two possible clock modes for the TPM counter. After any reset, CMOD[1:0] = 0:0 so the TPM counter is disabled.

The CMOD[1:0] bits may be read or written at any time. Disabling the TPM counter by writing zero to the CMOD[1:0] bits does not affect the TPM counter value or other registers, but must be acknowledged by the TPM counter clock domain before they read as zero.

The external clock input passes through a synchronizer clocked by the TPM counter clock to assure that counter transitions are properly aligned to counter clock transitions. Therefore, to meet Nyquist criteria considering also jitter, the frequency of the external clock source must be less than half of the counter clock frequency.

27.4.2 Prescaler

The selected counter clock source passes through a prescaler that is a 7-bit counter. The value of the prescaler is selected by the PS[2:0] bits. The following figure shows an example of the prescaler counter and TPM counter.

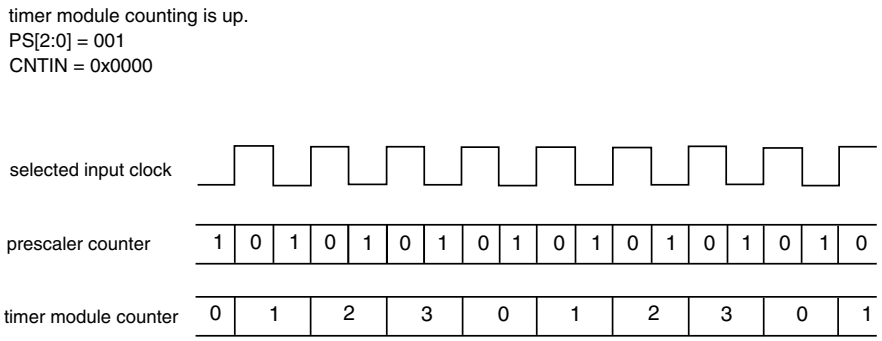

Figure 27-35. Example of the Prescaler Counter

27.4.3 Counter

The TPM has a 16-bit counter that is used by the channels either for input or output modes. The counter updates from the selected clock divided by the prescaler.

The TPM counter has these modes of operation:

- up counting (see Up Counting)
- up-down counting (see Up-Down Counting)

27.4.3.1 Up Counting

Up counting is selected when (CPWMS = 0)

The value of zero is loaded into the TPM counter, and the counter increments until the value of MOD is reached, at which point the counter is reloaded with zero.

The TPM period when using up counting is (MOD + 0x0001) × period of the TPM counter clock.

The TOF bit is set when the TPM counter changes from MOD to zero.

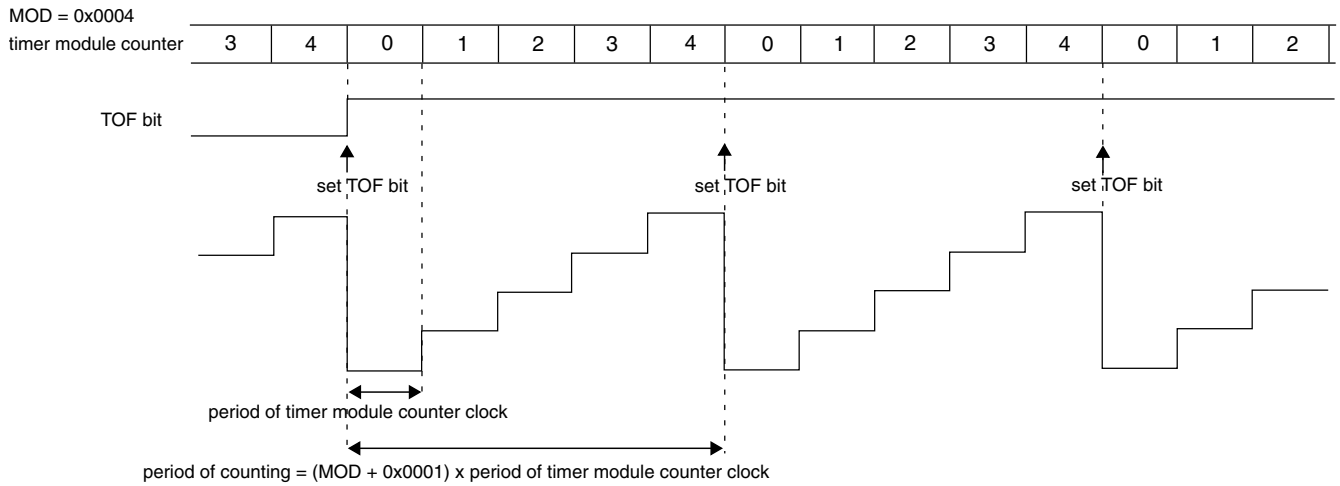

Figure 27-36. Example of TPM Up Counting

Note

- MOD = 0000 is a redundant condition. In this case, the TPM counter is always equal to MOD and the TOF bit is set in each rising edge of the TPM counter clock.

27.4.3.2 Up-Down Counting

Up-down counting is selected when (CPWMS = 1). When configured for up-down counting, configuring MOD to less than 2 is not supported.

The value of zero is loaded into the TPM counter, and the counter increments until the value of MOD is reached, at which point the counter is decremented until it returns to zero and the up-down counting restarts.

The TPM period when using up-down counting is 2 × MOD × period of the TPM counter clock.

The TOF bit is set when the TPM counter changes from MOD to (MOD – 1).

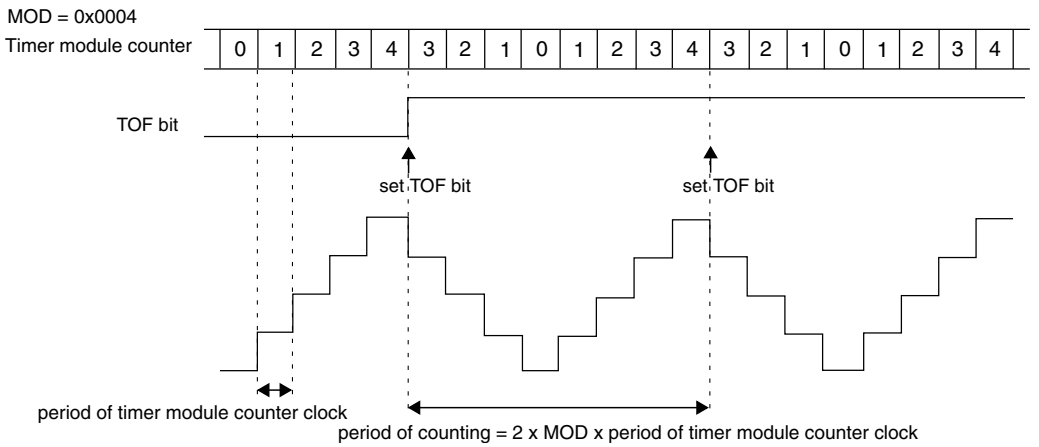

Figure 27-37. Example of Up-Down Counting

27.4.3.3 Counter Reset

Any write to CNT resets the TPM counter and the channel outputs to their initial values (except for channels in output compare mode).

27.4.4 Input Capture Mode

The input capture mode is selected when (CPWMS = 0), (MSnB:MSnA = 0:0), and (ELSnB:ELSnA ≠ 0:0).

When a selected edge occurs on the channel input, the current value of the TPM counter is captured into the CnV register, at the same time the CHnF bit is set and the channel interrupt is generated if enabled by CHnIE = 1 (see the following figure).

When a channel is configured for input capture, the TPM_CHn pin is an edge-sensitive input. ELSnB:ELSnA control bits determine which edge, falling or rising, triggers input-capture event. Note that the maximum frequency for the channel input signal to be detected correctly is counter clock divided by 4, which is required to meet Nyquist criteria for signal sampling.

Writes to the CnV register are ignored in input capture mode.

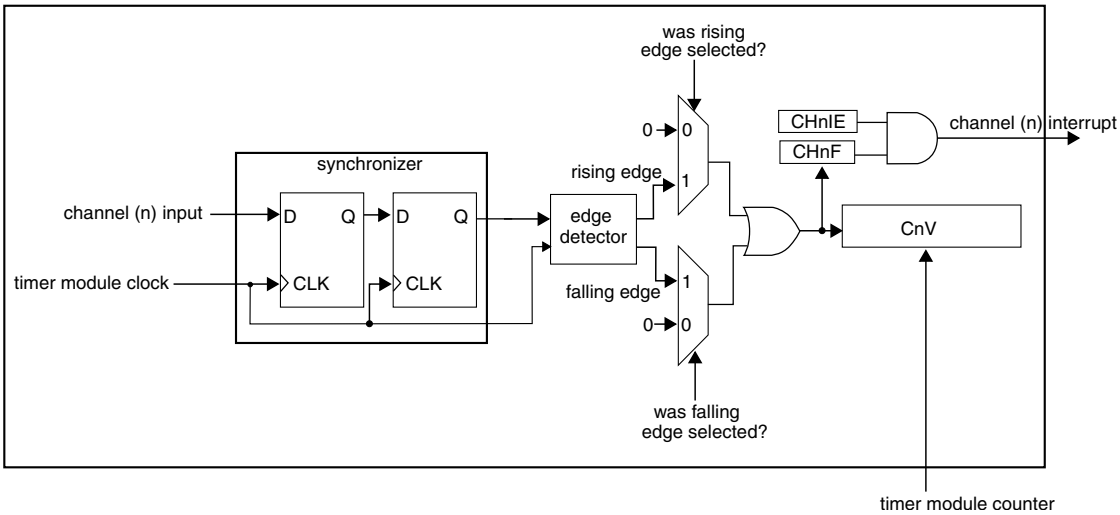

Figure 27-38. Input capture mode

The CHnF bit is set on the third rising edge of the counter clock after a valid edge occurs on the channel input.

27.4.5 Output Compare Mode

The output compare mode is selected when (CPWMS = 0), and (MSnB:MSnA = X:1).

In output compare mode, the TPM can generate timed pulses with programmable position, polarity, duration, and frequency. When the counter matches the value in the CnV register of an output compare channel, the channel (n) output can be set, cleared or toggled if MSnB is clear. If MSnB is set then the channel (n) output is pulsed high or low for as long as the counter matches the value in the CnV register.

When a channel is initially configured to output compare mode, the channel output updates with its negated value (logic 0 for set/toggle/pulse high and logic one for clear/pulse low).

The CHnF bit is set and the channel (n) interrupt is generated (if CHnIE = 1) at the channel (n) match (TPM counter = CnV).

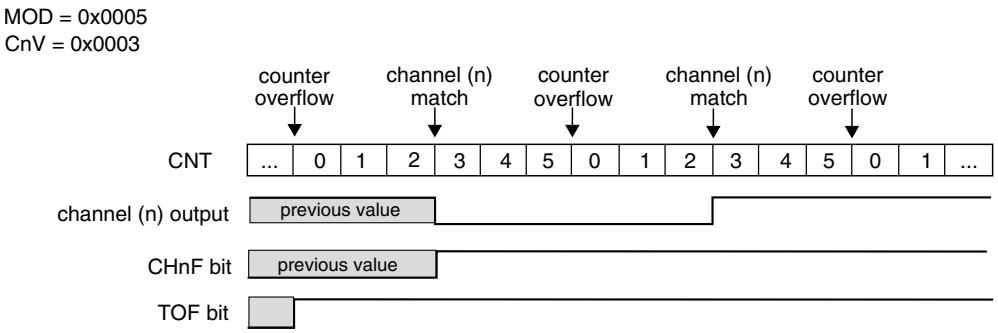

Figure 27-39. Example of the output compare mode when the match toggles the channel output

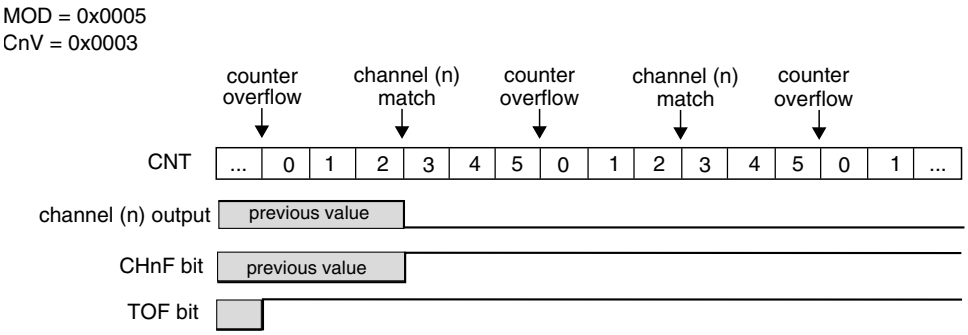

Figure 27-40. Example of the output compare mode when the match clears the channel output

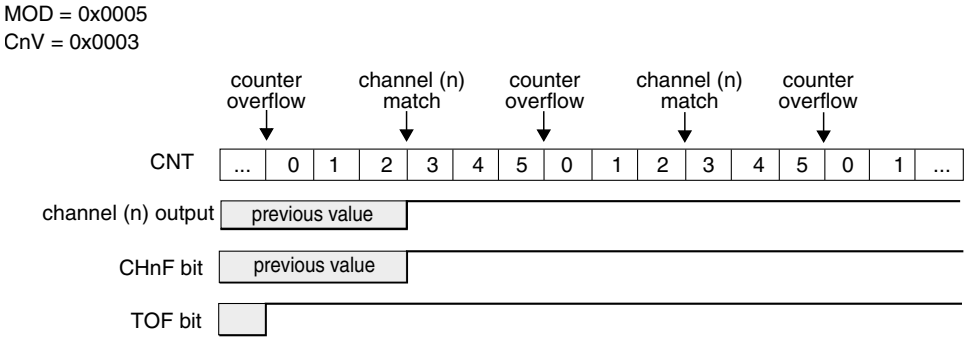

Figure 27-41. Example of the output compare mode when the match sets the channel output

It is possible to use the output compare mode with (ELSnB:ELSnA = 0:0). In this case, when the counter reaches the value in the CnV register, the CHnF bit is set and the channel (n) interrupt is generated (if CHnIE = 1), however the channel (n) output is not modified and controlled by TPM.

27.4.6 Edge-Aligned PWM (EPWM) Mode

The edge-aligned mode is selected when (CPWMS = 0), and (MSnB:MSnA = 1:0). The EPWM period is determined by (MOD + 0x0001) and the pulse width (duty cycle) is determined by CnV.

The CHnF bit is set and the channel (n) interrupt is generated (if CHnIE = 1) at the channel (n) match (TPM counter = CnV), that is, at the end of the pulse width.

This type of PWM signal is called edge-aligned because the leading edges of all PWM signals are aligned with the beginning of the period, which is the same for all channels within an TPM.

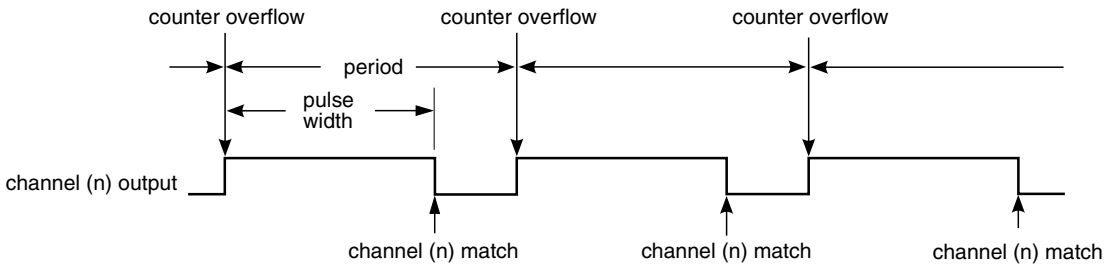

Figure 27-42. EPWM period and pulse width with ELSnB:ELSnA = 1:0

If (ELSnB:ELSnA = 0:0) when the counter reaches the value in the CnV register, the CHnF bit is set and the channel (n) interrupt is generated (if CHnIE = 1), however the channel (n) output is not controlled by TPM.

If (ELSnB:ELSnA = 1:0), then the channel (n) output is forced high at the counter overflow (when the zero is loaded into the TPM counter), and it is forced low at the channel (n) match (TPM counter = CnV) (see the following figure).

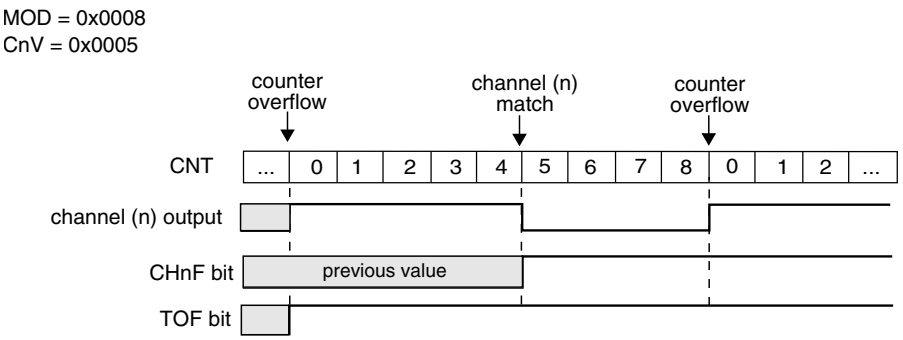

Figure 27-43. EPWM signal with ELSnB:ELSnA = 1:0

If (ELSnB:ELSnA = X:1), then the channel (n) output is forced low at the counter overflow (when zero is loaded into the TPM counter), and it is forced high at the channel (n) match (TPM counter = CnV) (see the following figure).

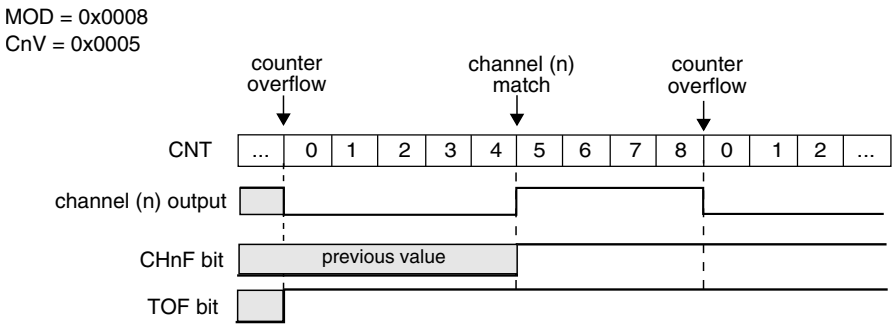

Figure 27-44. EPWM signal with ELSnB:ELSnA = X:1

If (CnV = 0x0000), then the channel (n) output is a 0% duty cycle EPWM signal. If (CnV > MOD), then the channel (n) output is a 100% duty cycle EPWM signal and CHnF bit is not set since there is never a channel (n) match. Therefore, MOD must be less than 0xFFFF in order to get a 100% duty cycle EPWM signal.

27.4.7 Center-Aligned PWM (CPWM) Mode

The center-aligned mode is selected when (CPWMS = 1) and (MSnB:MSnA = 1:0).

The CPWM pulse width (duty cycle) is determined by 2 × CnV and the period is determined by 2 × MOD (see the following figure). MOD must be kept in the range of 0x0001 to 0x7FFF because values outside this range can produce ambiguous results.

In the CPWM mode, the TPM counter counts up until it reaches MOD and then counts down until it reaches zero.

The CHnF bit is set and channel (n) interrupt is generated (if CHnIE = 1) at the channel (n) match (TPM counter = CnV) when the TPM counting is down (at the begin of the pulse width) and when the TPM counting is up (at the end of the pulse width).

This type of PWM signal is called center-aligned because the pulse width centers for all channels are when the TPM counter is zero.

The other channel modes are not designed to be used with the up-down counter (CPWMS = 1). Therefore, all TPM channels should be used in CPWM mode when (CPWMS = 1).

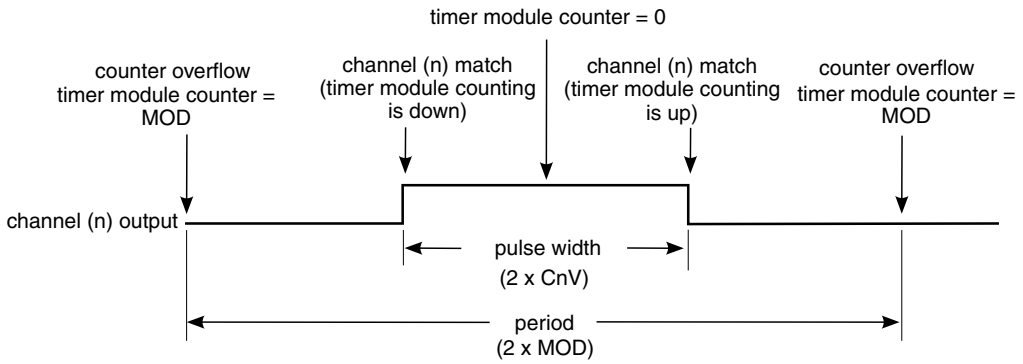

Figure 27-45. CPWM period and pulse width with ELSnB:ELSnA = 1:0

If (ELSnB:ELSnA = 0:0) when the TPM counter reaches the value in the CnV register, the CHnF bit is set and the channel (n) interrupt is generated (if CHnIE = 1), however the channel (n) output is not controlled by TPM.

If (ELSnB:ELSnA = 1:0), then the channel (n) output is forced high at the channel (n) match (TPM counter = CnV) when counting down, and it is forced low at the channel (n) match when counting up (see the following figure).

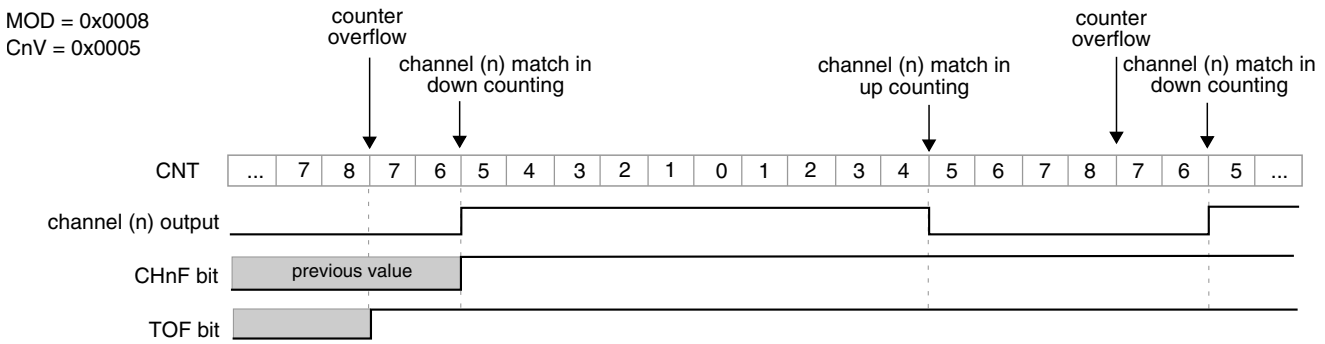

Figure 27-46. CPWM signal with ELSnB:ELSnA = 1:0

If (ELSnB:ELSnA = X:1), then the channel (n) output is forced low at the channel (n) match (TPM counter = CnV) when counting down, and it is forced high at the channel (n) match when counting up (see the following figure).

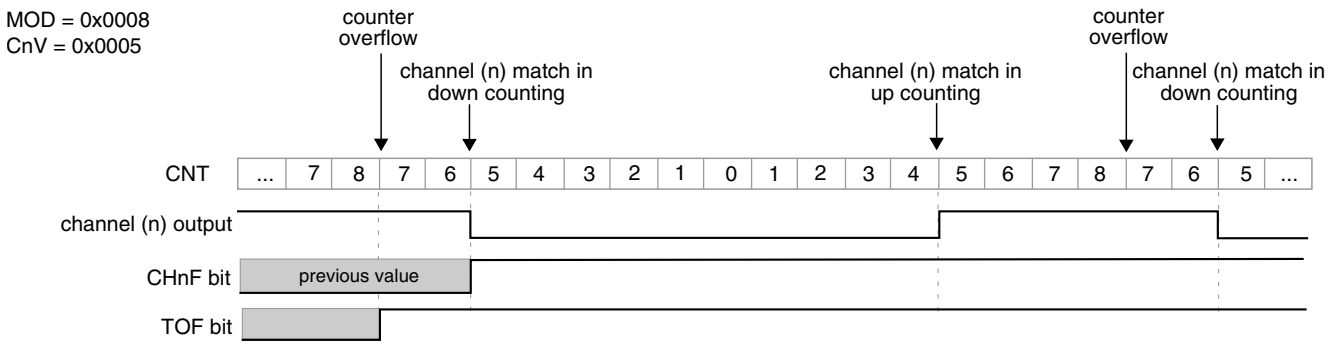

Figure 27-47. CPWM signal with ELSnB:ELSnA = X:1

If (CnV = 0x0000) then the channel (n) output is a 0% duty cycle CPWM signal.

If (CnV > MOD), then the channel (n) output is a 100% duty cycle CPWM signal, although the CHnF bit is set when the counter changes from incrementing to decrementing. Therefore, MOD must be less than 0xFFFF in order to get a 100% duty cycle CPWM signal.

27.4.8 Registers Updated from Write Buffers

27.4.8.1 MOD Register Update

If (CMOD[1:0] = 0:0) then MOD register is updated when MOD register is written.

If (CMOD[1:0] ≠ 0:0), then MOD register is updated according to the CPWMS bit, that is:

- If the selected mode is not CPWM then MOD register is updated after MOD register was written and the TPM counter changes from MOD to zero.
- If the selected mode is CPWM then MOD register is updated after MOD register was written and the TPM counter changes from MOD to (MOD – 1).

27.4.8.2 CnV Register Update

If (CMOD[1:0] = 0:0) then CnV register is updated when CnV register is written.

If (CMOD[1:0] ≠ 0:0), then CnV register is updated according to the selected mode, that is:

- If the selected mode is output compare then CnV register is updated on the next TPM counter increment (end of the prescaler counting) after CnV register was written.
- If the selected mode is EPWM then CnV register is updated after CnV register was written and the TPM counter changes from MOD to zero.
- If the selected mode is CPWM then CnV register is updated after CnV register was written and the TPM counter changes from MOD to (MOD – 1).

27.4.9 Reset Overview

The TPM is reset whenever any chip reset occurs.

When the TPM exits from reset:

- the TPM counter and the prescaler counter are zero and are stopped (CMOD[1:0] = 0:0);
- the timer overflow interrupt is zero;
- the channels interrupts are zero;
- the channels are in input capture mode;
- the channels outputs are zero;
- the channels pins are not controlled by TPM (ELS(n)B:ELS(n)A = 0:0).

27.4.10 TPM Interrupts

This section describes TPM interrupts.

27.4.10.1 Timer Overflow Interrupt

The timer overflow interrupt is generated when (TOIE = 1) and (TOF = 1).

27.4.10.2 Channel (n) Interrupt

The channel (n) interrupt is generated when (CHnIE = 1) and (CHnF = 1).

Chapter 28
Low-Power Timer (LPTMR)

28.1 Introduction

NOTE

For the chip-specific implementation details of this module's instances, see the chip configuration information.

The low-power timer (LPTMR) can be configured to operate as a time counter with optional prescaler, or as a pulse counter with optional glitch filter, across all power modes, including the low-leakage modes. It can also continue operating through most system reset events, allowing it to be used as a time of day counter.

28.1.1 Features

The features of the LPTMR module include:

- 16-bit time counter or pulse counter with compare
  - Optional interrupt can generate asynchronous wakeup from any low-power mode
  - Hardware trigger output
  - Counter supports free-running mode or reset on compare
- Configurable clock source for prescaler/glitch filter
- Configurable input source for pulse counter
  - Rising-edge or falling-edge

28.1.2 Modes of operation

The following table describes the operation of the LPTMR module in various modes.

Table 28-1. Modes of operation

Modes	Description
Run	The LPTMR operates normally.
Wait	The LPTMR continues to operate normally and may be configured to exit the low-power mode by generating an interrupt request.
Stop	The LPTMR continues to operate normally and may be configured to exit the low-power mode by generating an interrupt request.
Low-Leakage	The LPTMR continues to operate normally and may be configured to exit the low-power mode by generating an interrupt request.
Debug	The LPTMR operates normally in Pulse Counter mode, but counter does not increment in Time Counter mode.

28.2 LPTMR signal descriptions

Table 28-2. LPTMR signal descriptions

Signal	I/O	Description
LPTMR_ALT*n*	I	Pulse Counter Input pin

28.2.1 Detailed signal descriptions

Table 28-3. LPTMR interface—detailed signal descriptions

Signal	I/O	Description	
LPTMR_ALT*n*	I	Pulse Counter Input The LPTMR can select one of the input pins to be used in Pulse Counter mode.	
		State meaning	Assertion—If configured for pulse counter mode with active-high input, then assertion causes the CNR to increment. Deassertion—If configured for pulse counter mode with active-low input, then deassertion causes the CNR to increment.
		Timing	Assertion or deassertion may occur at any time; input may assert asynchronously to the bus clock.

28.3 Memory map and register definition

LPTMR memory map

Absolute address (hex)	Register name	Width (in bits)	Access	Reset value	Section/ page
4004_0000	Low Power Timer Control Status Register (LPTMR0_CSR)	32	R/W	0000_0000h	28.3.1/437
4004_0004	Low Power Timer Prescale Register (LPTMR0_PSR)	32	R/W	0000_0000h	28.3.2/438
4004_0008	Low Power Timer Compare Register (LPTMR0_CMR)	32	R/W	0000_0000h	28.3.3/440
4004_000C	Low Power Timer Counter Register (LPTMR0_CNR)	32	R	0000_0000h	28.3.4/440

28.3.1 Low Power Timer Control Status Register (LPTMRx_CSR)

Address: 4004_0000h base + 0h offset = 4004_0000h

Bit	31	30	29	28	27	26	25	24	23	22	21	20	19	18	17	16
R	0															
W																
Reset	0	0	0	0	0	0	0	0	0	0	0	0	0	0	0	0

Bit	15	14	13	12	11	10	9	8	7	6	5	4	3	2	1	0
R	0								TCF	TIE	TPS		TPP	TFC	TMS	TEN
W									w1c							
Reset	0	0	0	0	0	0	0	0	0	0	0	0	0	0	0	0

LPTMRx_CSR field descriptions

Field	Description
31–8 Reserved	This field is reserved. This read-only field is reserved and always has the value 0.
7 TCF	Timer Compare Flag TCF is set when the LPTMR is enabled and the CNR equals the CMR and increments. TCF is cleared when the LPTMR is disabled or a logic 1 is written to it. 0 The value of CNR is not equal to CMR and increments. 1 The value of CNR is equal to CMR and increments.
6 TIE	Timer Interrupt Enable When TIE is set, the LPTMR Interrupt is generated whenever TCF is also set. 0 Timer interrupt disabled. 1 Timer interrupt enabled.
5–4 TPS	Timer Pin Select Configures the input source to be used in Pulse Counter mode. TPS must be altered only when the LPTMR is disabled. The input connections vary by device. See the chip configuration details for information on the connections to these inputs. 00 Pulse counter input 0 is selected.

Table continues on the next page...

LPTMRx_CSR field descriptions (continued)

Field	Description
	01 Pulse counter input 1 is selected. 10 Pulse counter input 2 is selected. 11 Pulse counter input 3 is selected.
3 TPP	Timer Pin Polarity Configures the polarity of the input source in Pulse Counter mode. TPP must be changed only when the LPTMR is disabled. 0 Pulse Counter input source is active-high, and the CNR will increment on the rising-edge. 1 Pulse Counter input source is active-low, and the CNR will increment on the falling-edge.
2 TFC	Timer Free-Running Counter When clear, TFC configures the CNR to reset whenever TCF is set. When set, TFC configures the CNR to reset on overflow. TFC must be altered only when the LPTMR is disabled. 0 CNR is reset whenever TCF is set. 1 CNR is reset on overflow.
1 TMS	Timer Mode Select Configures the mode of the LPTMR. TMS must be altered only when the LPTMR is disabled. 0 Time Counter mode. 1 Pulse Counter mode.
0 TEN	Timer Enable When TEN is clear, it resets the LPTMR internal logic, including the CNR and TCF. When TEN is set, the LPTMR is enabled. While writing 1 to this field, CSR[5:1] must not be altered. 0 LPTMR is disabled and internal logic is reset. 1 LPTMR is enabled.

28.3.2 Low Power Timer Prescale Register (LPTMRx_PSR)

Address: 4004_0000h base + 4h offset = 4004_0004h

Bit	31	30	29	28	27	26	25	24	23	22	21	20	19	18	17	16
R	0															
W																
Reset	0	0	0	0	0	0	0	0	0	0	0	0	0	0	0	0

Bit	15	14	13	12	11	10	9	8	7	6	5	4	3	2	1	0
R	0								PRESCALE					PBYP	PCS	
W																
Reset	0	0	0	0	0	0	0	0	0	0	0	0	0	0	0	0

LPTMRx_PSR field descriptions

Field	Description
31–7 Reserved	This field is reserved. This read-only field is reserved and always has the value 0.
6–3 PRESCALE	Prescale Value Configures the size of the Prescaler in Time Counter mode or width of the glitch filter in Pulse Counter mode. PRESCALE must be altered only when the LPTMR is disabled. 0000 Prescaler divides the prescaler clock by 2; glitch filter does not support this configuration. 0001 Prescaler divides the prescaler clock by 4; glitch filter recognizes change on input pin after 2 rising clock edges. 0010 Prescaler divides the prescaler clock by 8; glitch filter recognizes change on input pin after 4 rising clock edges. 0011 Prescaler divides the prescaler clock by 16; glitch filter recognizes change on input pin after 8 rising clock edges. 0100 Prescaler divides the prescaler clock by 32; glitch filter recognizes change on input pin after 16 rising clock edges. 0101 Prescaler divides the prescaler clock by 64; glitch filter recognizes change on input pin after 32 rising clock edges. 0110 Prescaler divides the prescaler clock by 128; glitch filter recognizes change on input pin after 64 rising clock edges. 0111 Prescaler divides the prescaler clock by 256; glitch filter recognizes change on input pin after 128 rising clock edges. 1000 Prescaler divides the prescaler clock by 512; glitch filter recognizes change on input pin after 256 rising clock edges. 1001 Prescaler divides the prescaler clock by 1024; glitch filter recognizes change on input pin after 512 rising clock edges. 1010 Prescaler divides the prescaler clock by 2048; glitch filter recognizes change on input pin after 1024 rising clock edges. 1011 Prescaler divides the prescaler clock by 4096; glitch filter recognizes change on input pin after 2048 rising clock edges. 1100 Prescaler divides the prescaler clock by 8192; glitch filter recognizes change on input pin after 4096 rising clock edges. 1101 Prescaler divides the prescaler clock by 16,384; glitch filter recognizes change on input pin after 8192 rising clock edges. 1110 Prescaler divides the prescaler clock by 32,768; glitch filter recognizes change on input pin after 16,384 rising clock edges. 1111 Prescaler divides the prescaler clock by 65,536; glitch filter recognizes change on input pin after 32,768 rising clock edges.
2 PBYP	Prescaler Bypass When PBYP is set, the selected prescaler clock in Time Counter mode or selected input source in Pulse Counter mode directly clocks the CNR. When PBYP is clear, the CNR is clocked by the output of the prescaler/glitch filter. PBYP must be altered only when the LPTMR is disabled. 0 Prescaler/glitch filter is enabled. 1 Prescaler/glitch filter is bypassed.
PCS	Prescaler Clock Select Selects the clock to be used by the LPTMR prescaler/glitch filter. PCS must be altered only when the LPTMR is disabled. The clock connections vary by device. **NOTE:** See the chip configuration details for information on the connections to these inputs.

Table continues on the next page...

LPTMRx_PSR field descriptions (continued)

Field	Description
	00 Prescaler/glitch filter clock 0 selected. 01 Prescaler/glitch filter clock 1 selected. 10 Prescaler/glitch filter clock 2 selected. 11 Prescaler/glitch filter clock 3 selected.

28.3.3 Low Power Timer Compare Register (LPTMRx_CMR)

Address: 4004_0000h base + 8h offset = 4004_0008h

Bit	31	30	29	28	27	26	25	24	23	22	21	20	19	18	17	16	15	14	13	12	11	10	9	8	7	6	5	4	3	2	1	0
R	0																COMPARE															
W																																
Reset	0	0	0	0	0	0	0	0	0	0	0	0	0	0	0	0	0	0	0	0	0	0	0	0	0	0	0	0	0	0	0	0

LPTMRx_CMR field descriptions

Field	Description
31–16 Reserved	This field is reserved. This read-only field is reserved and always has the value 0.
COMPARE	Compare Value When the LPTMR is enabled and the CNR equals the value in the CMR and increments, TCF is set and the hardware trigger asserts until the next time the CNR increments. If the CMR is 0, the hardware trigger will remain asserted until the LPTMR is disabled. If the LPTMR is enabled, the CMR must be altered only when TCF is set.

28.3.4 Low Power Timer Counter Register (LPTMRx_CNR)

Address: 4004_0000h base + Ch offset = 4004_000Ch

Bit	31	30	29	28	27	26	25	24	23	22	21	20	19	18	17	16	15	14	13	12	11	10	9	8	7	6	5	4	3	2	1	0
R	0																COUNTER															
W																																
Reset	0	0	0	0	0	0	0	0	0	0	0	0	0	0	0	0	0	0	0	0	0	0	0	0	0	0	0	0	0	0	0	0

LPTMRx_CNR field descriptions

Field	Description
31–16 Reserved	This field is reserved. This read-only field is reserved and always has the value 0.
COUNTER	Counter Value

28.4 Functional description

28.4.1 LPTMR power and reset

The LPTMR remains powered in all power modes, including low-leakage modes. If the LPTMR is not required to remain operating during a low-power mode, then it must be disabled before entering the mode.

The LPTMR is reset only on global Power On Reset (POR) or Low Voltage Detect (LVD). When configuring the LPTMR registers, the CSR must be initially written with the timer disabled, before configuring the PSR and CMR. Then, CSR[TIE] must be set as the last step in the initialization. This ensures the LPTMR is configured correctly and the LPTMR counter is reset to zero following a warm reset.

28.4.2 LPTMR clocking

The LPTMR prescaler/glitch filter can be clocked by one of the four clocks. The clock source must be enabled before the LPTMR is enabled.

NOTE

The clock source selected may need to be configured to remain enabled in low-power modes, otherwise the LPTMR will not operate during low-power modes.

In Pulse Counter mode with the prescaler/glitch filter bypassed, the selected input source directly clocks the CNR and no other clock source is required. To minimize power in this case, configure the prescaler clock source for a clock that is not toggling.

NOTE

The clock source or pulse input source selected for the LPTMR should not exceed the frequency f_{LPTMR} defined in the device datasheet.

28.4.3 LPTMR prescaler/glitch filter

The LPTMR prescaler and glitch filter share the same logic which operates as a prescaler in Time Counter mode and as a glitch filter in Pulse Counter mode.

NOTE

The prescaler/glitch filter configuration must not be altered when the LPTMR is enabled.

28.4.3.1 Prescaler enabled

In Time Counter mode, when the prescaler is enabled, the output of the prescaler directly clocks the CNR. When the LPTMR is enabled, the CNR will increment every 2^2 to 2^{16} prescaler clock cycles. After the LPTMR is enabled, the first increment of the CNR will take an additional one or two prescaler clock cycles due to synchronization logic.

28.4.3.2 Prescaler bypassed

In Time Counter mode, when the prescaler is bypassed, the selected prescaler clock increments the CNR on every clock cycle. When the LPTMR is enabled, the first increment will take an additional one or two prescaler clock cycles due to synchronization logic.

28.4.3.3 Glitch filter

In Pulse Counter mode, when the glitch filter is enabled, the output of the glitch filter directly clocks the CNR. When the LPTMR is first enabled, the output of the glitch filter is asserted, that is, logic 1 for active-high and logic 0 for active-low. The following table shows the change in glitch filter output with the selected input source.

If	Then
The selected input source remains deasserted for at least 2^1 to 2^{15} consecutive prescaler clock rising edges	The glitch filter output will also deassert.
The selected input source remains asserted for at least 2^1 to 2^{15} consecutive prescaler clock rising-edges	The glitch filter output will also assert.

NOTE

The input is only sampled on the rising clock edge.

The CNR will increment each time the glitch filter output asserts. In Pulse Counter mode, the maximum rate at which the CNR can increment is once every 2^2 to 2^{16} prescaler clock edges. When first enabled, the glitch filter will wait an additional one or two prescaler clock edges due to synchronization logic.

28.4.3.4 Glitch filter bypassed

In Pulse Counter mode, when the glitch filter is bypassed, the selected input source increments the CNR every time it asserts. Before the LPTMR is first enabled, the selected input source is forced to be asserted. This prevents the CNR from incrementing if the selected input source is already asserted when the LPTMR is first enabled.

28.4.4 LPTMR compare

When the CNR equals the value of the CMR and increments, the following events occur:

- CSR[TCF] is set.
- LPTMR interrupt is generated if CSR[TIE] is also set.
- LPTMR hardware trigger is generated.
- CNR is reset if CSR[TFC] is clear.

When the LPTMR is enabled, the CMR can be altered only when CSR[TCF] is set. When updating the CMR, the CMR must be written and CSR[TCF] must be cleared before the LPTMR counter has incremented past the new LPTMR compare value.

28.4.5 LPTMR counter

The CNR increments by one on every:

- Prescaler clock in Time Counter mode with prescaler bypassed
- Prescaler output in Time Counter mode with prescaler enabled
- Input source assertion in Pulse Counter mode with glitch filter bypassed
- Glitch filter output in Pulse Counter mode with glitch filter enabled

The CNR is reset when the LPTMR is disabled or if the counter register overflows. If CSR[TFC] is cleared, then the CNR is also reset whenever CSR[TCF] is set.

The CNR continues incrementing when the core is halted in Debug mode when configured for Pulse Counter mode, the CNR will stop incrementing when the core is halted in Debug mode when configured for Time Counter mode.

The CNR cannot be initialized, but can be read at any time. On each read of the CNR, software must first write to the CNR with any value. This will synchronize and register the current value of the CNR into a temporary register. The contents of the temporary register are returned on each read of the CNR.

When reading the CNR, the bus clock must be at least two times faster than the rate at which the LPTMR counter is incrementing, otherwise incorrect data may be returned.

28.4.6 LPTMR hardware trigger

The LPTMR hardware trigger asserts at the same time the CSR[TCF] is set and can be used to trigger hardware events in other peripherals without software intervention. The hardware trigger is always enabled.

When	Then
The CMR is set to 0 with CSR[TFC] clear	The LPTMR hardware trigger will assert on the first compare and does not deassert.
The CMR is set to a nonzero value, or, if CSR[TFC] is set	The LPTMR hardware trigger will assert on each compare and deassert on the following increment of the CNR.

28.4.7 LPTMR interrupt

The LPTMR interrupt is generated whenever CSR[TIE] and CSR[TCF] are set. CSR[TCF] is cleared by disabling the LPTMR or by writing a logic 1 to it.

CSR[TIE] can be altered and CSR[TCF] can be cleared while the LPTMR is enabled.

The LPTMR interrupt is generated asynchronously to the system clock and can be used to generate a wakeup from any low-power mode, including the low-leakage modes, provided the LPTMR is enabled as a wakeup source.

Chapter 29
Serial Peripheral Interface (SPI)

29.1 Introduction

NOTE

For the chip-specific implementation details of this module's instances, see the chip configuration information.

The serial peripheral interface (SPI) module provides for full-duplex, synchronous, serial communication between the MCU and peripheral devices. These peripheral devices can include other microcontrollers, analog-to-digital converters, shift registers, sensors, and memories, among others.

The SPI runs at a baud rate up to the bus clock divided by two in master mode and up to the bus clock divided by four in slave mode. Software can poll the status flags, or SPI operation can be interrupt driven.

NOTE

For the actual maximum SPI baud rate, refer to the Chip Configuration details and to the device's Data Sheet.

The SPI also includes a hardware match feature for the receive data buffer.

29.1.1 Features

The SPI includes these distinctive features:

- Master mode or slave mode operation
- Full-duplex or single-wire bidirectional mode
- Programmable transmit bit rate
- Double-buffered transmit and receive data register

- Serial clock phase and polarity options
- Slave select output
- Mode fault error flag with CPU interrupt capability
- Control of SPI operation during wait mode
- Selectable MSB-first or LSB-first shifting
- Receive data buffer hardware match feature

29.1.2 Modes of operation

The SPI functions in the following three modes.

- Run mode

  This is the basic mode of operation.

- Wait mode

  SPI operation in Wait mode is a configurable low power mode, controlled by the SPISWAI bit located in the SPIx_C2 register. In Wait mode, if C2[SPISWAI] is clear, the SPI operates like in Run mode. If C2[SPISWAI] is set, the SPI goes into a power conservative state, with the SPI clock generation turned off. If the SPI is configured as a master, any transmission in progress stops, but is resumed after CPU enters Run mode. If the SPI is configured as a slave, reception and transmission of a byte continues, so that the slave stays synchronized to the master.

- Stop mode

  To reduce power consumption, the SPI is inactive in stop modes where the peripheral bus clock is stopped but internal logic states are retained. If the SPI is configured as a master, any transmission in progress stops, but is resumed after the CPU enters run mode. If the SPI is configured as a slave, reception and transmission of a data continues, so that the slave stays synchronized to the master.

  The SPI is completely disabled in Stop modes where the peripheral bus clock is stopped and internal logic states are not retained. When the CPU wakes from these Stop modes, all SPI register content is reset.

Detailed descriptions of operating modes appear in Low-power mode options.

29.1.3 Block diagrams

This section includes block diagrams showing SPI system connections, the internal organization of the SPI module, and the SPI clock dividers that control the master mode bit rate.

29.1.3.1 SPI system block diagram

The following figure shows the SPI modules of two MCUs connected in a master-slave arrangement. The master device initiates all SPI data transfers. During a transfer, the master shifts data out (on the MOSI pin) to the slave while simultaneously shifting data in (on the MISO pin) from the slave. The transfer effectively exchanges the data that was in the SPI shift registers of the two SPI systems. The SPSCK signal is a clock output from the master and an input to the slave. The slave device must be selected by a low level on the slave select input (SS pin). In this system, the master device has configured its SS pin as an optional slave select output.

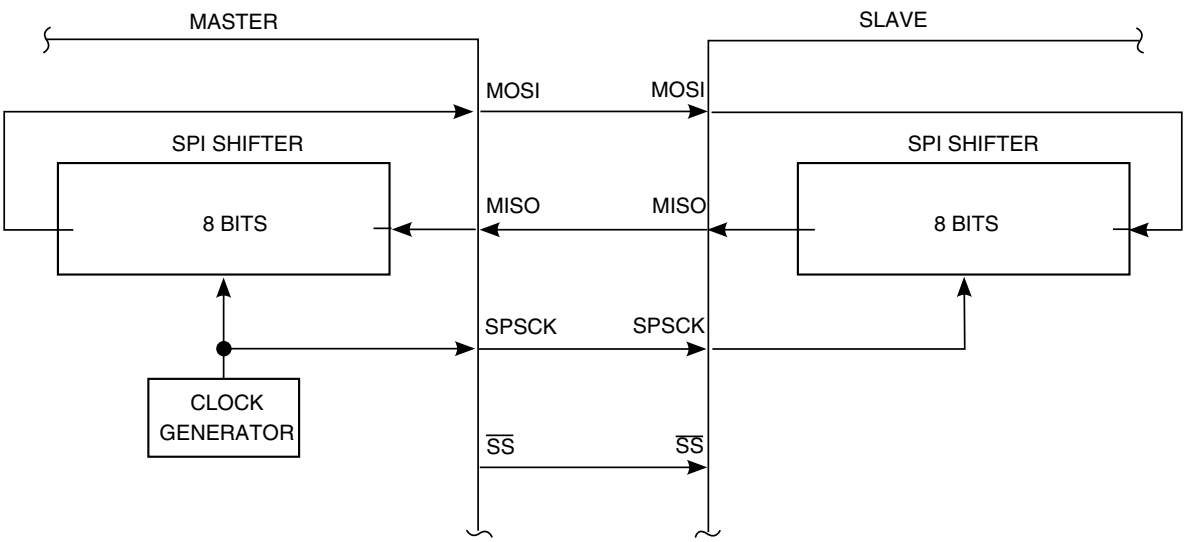

Figure 29-1. SPI system connections

29.1.3.2 SPI module block diagram

The following is a block diagram of the SPI module. The central element of the SPI is the SPI shift register. Data is written to the double-buffered transmitter (write to SPIx_D) and gets transferred to the SPI Shift Register at the start of a data transfer. After shifting in 8 bits of data, the data is transferred into the double-buffered receiver where it can be read from SPIx_D. Pin multiplexing logic controls connections between MCU pins and the SPI module.

When the SPI is configured as a master, the clock output is routed to the SPSCK pin, the shifter output is routed to MOSI, and the shifter input is routed from the MISO pin.

When the SPI is configured as a slave, the SPSCK pin is routed to the clock input of the SPI, the shifter output is routed to MISO, and the shifter input is routed from the MOSI pin.

In the external SPI system, simply connect all SPSCK pins to each other, all MISO pins together, and all MOSI pins together. Peripheral devices often use slightly different names for these pins.

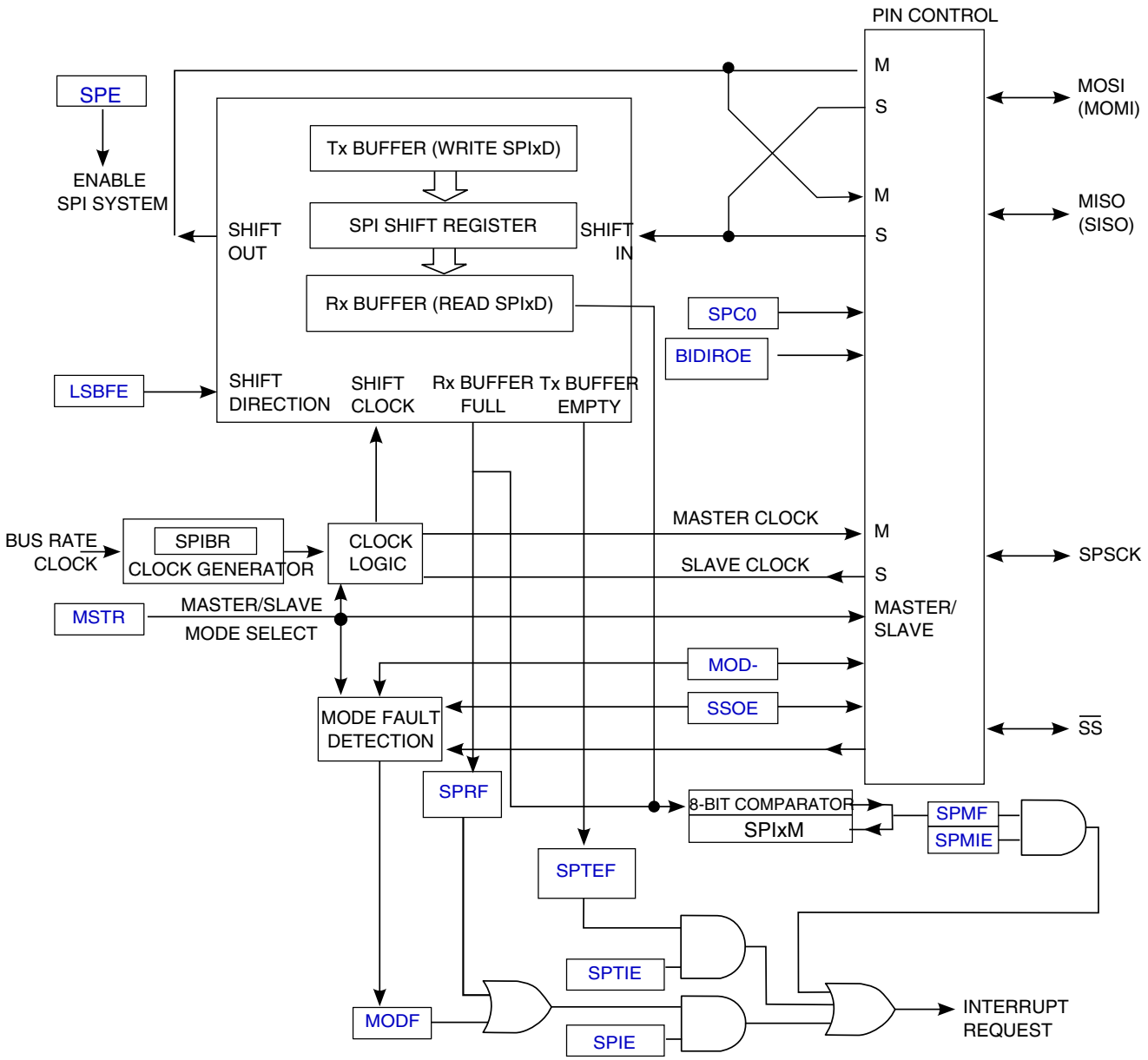

Figure 29-2. SPI module block diagram without FIFO

29.2 External signal description

The SPI optionally shares four port pins. The function of these pins depends on the settings of SPI control bits. When the SPI is disabled (SPE = 0), these four pins revert to other functions that are not controlled by the SPI (based on chip configuration).

29.2.1 SPSCK — SPI Serial Clock

When the SPI is enabled as a slave, this pin is the serial clock input. When the SPI is enabled as a master, this pin is the serial clock output.

29.2.2 MOSI — Master Data Out, Slave Data In

When the SPI is enabled as a master and SPI pin control zero (SPC0) is 0 (not bidirectional mode), this pin is the serial data output. When the SPI is enabled as a slave and SPC0 is 0, this pin is the serial data input. If SPC0 is 1 to select single-wire bidirectional mode, and master mode is selected, this pin becomes the bidirectional data I/O pin (MOMI). Also, the bidirectional mode output enable bit determines whether the pin acts as an input (BIDIROE is 0) or an output (BIDIROE is 1). If SPC0 is 1 and slave mode is selected, this pin is not used by the SPI and reverts to other functions (based on chip configuration).

29.2.3 MISO — Master Data In, Slave Data Out

When the SPI is enabled as a master and SPI pin control zero (SPC0) is 0 (not bidirectional mode), this pin is the serial data input. When the SPI is enabled as a slave and SPC0 is 0, this pin is the serial data output. If SPC0 is 1 to select single-wire bidirectional mode, and slave mode is selected, this pin becomes the bidirectional data I/O pin (SISO), and the bidirectional mode output enable bit determines whether the pin acts as an input (BIDIROE is 0) or an output (BIDIROE is 1). If SPC0 is 1 and master mode is selected, this pin is not used by the SPI and reverts to other functions (based on chip configuration).

29.2.4 $\overline{SS}$ — Slave Select

When the SPI is enabled as a slave, this pin is the low-true slave select input. When the SPI is enabled as a master and mode fault enable is off (MODFEN is 0), this pin is not used by the SPI and reverts to other functions (based on chip configuration). When the SPI is enabled as a master and MODFEN is 1, the slave select output enable bit determines whether this pin acts as the mode fault input (SSOE is 0) or as the slave select output (SSOE is 1).

29.3 Memory Map and Register Descriptions

The SPI has 8-bit registers to select SPI options, to control baud rate, to report SPI status, to hold an SPI data match value, and for transmit/receive data.

SPI memory map

Address offset (hex)	Absolute address (hex)	Register name	Width (in bits)	Access	Reset value	Section/ page
0	4007_6000	SPI Control Register 1 (SPI0_C1)	8	R/W	04h	29.3.1/450
1	4007_6001	SPI Control Register 2 (SPI0_C2)	8	R/W	00h	29.3.2/452
2	4007_6002	SPI Baud Rate Register (SPI0_BR)	8	R/W	00h	29.3.3/453
3	4007_6003	SPI Status Register (SPI0_S)	8	R	20h	29.3.4/454
5	4007_6005	SPI Data Register (SPI0_D)	8	R/W	00h	29.3.5/455
7	4007_6007	SPI Match Register (SPI0_M)	8	R/W	00h	29.3.6/456

29.3.1 SPI Control Register 1 (SPIx_C1)

This read/write register includes the SPI enable control, interrupt enables, and configuration options.

Address: 4007_6000h base + 0h offset = 4007_6000h

Bit	7	6	5	4	3	2	1	0
Read Write	SPIE	SPE	SPTIE	MSTR	CPOL	CPHA	SSOE	LSBFE
Reset	0	0	0	0	0	1	0	0

SPI0_C1 field descriptions

Field	Description
7 SPIE	SPI Interrupt Enable: for SPRF and MODF Enables the interrupt for SPI receive buffer full (SPRF) and mode fault (MODF) events. 0 Interrupts from SPRF and MODF are inhibited—use polling 1 Request a hardware interrupt when SPRF or MODF is 1
6 SPE	SPI System Enable Enables the SPI system and dedicates the SPI port pins to SPI system functions. If SPE is cleared, the SPI is disabled and forced into an idle state, and all status bits in the S register are reset. 0 SPI system inactive 1 SPI system enabled
5 SPTIE	SPI Transmit Interrupt Enable This is the interrupt enable bit for SPI transmit buffer empty (SPTEF). An interrupt occurs when the SPI transmit buffer is empty (SPTEF is set). 0 Interrupts from SPTEF inhibited (use polling) 1 When SPTEF is 1, hardware interrupt requested
4 MSTR	Master/Slave Mode Select Selects master or slave mode operation. 0 SPI module configured as a slave SPI device 1 SPI module configured as a master SPI device
3 CPOL	Clock Polarity Selects an inverted or non-inverted SPI clock. To transmit data between SPI modules, the SPI modules must have identical CPOL values. This bit effectively places an inverter in series with the clock signal either from a master SPI device or to a slave SPI device. Refer to the description of “SPI Clock Formats” for details. 0 Active-high SPI clock (idles low) 1 Active-low SPI clock (idles high)
2 CPHA	Clock Phase Selects one of two clock formats for different kinds of synchronous serial peripheral devices. Refer to the description of “SPI Clock Formats” for details. 0 First edge on SPSCK occurs at the middle of the first cycle of a data transfer. 1 First edge on SPSCK occurs at the start of the first cycle of a data transfer.
1 SSOE	Slave Select Output Enable This bit is used in combination with the Mode Fault Enable (MODFEN) field in the C2 register and the Master/Slave (MSTR) control bit to determine the function of the $\overline{SS}$ pin.

Table continues on the next page...

SPI0_C1 field descriptions (continued)

Field	Description
	0 When C2[MODFEN] is 0: In master mode, $\overline{SS}$ pin function is general-purpose I/O (not SPI). In slave mode, $\overline{SS}$ pin function is slave select input. When C2[MODFEN] is 1: In master mode, $\overline{SS}$ pin function is $\overline{SS}$ input for mode fault. In slave mode, $\overline{SS}$ pin function is slave select input. 1 When C2[MODFEN] is 0: In master mode, $\overline{SS}$ pin function is general-purpose I/O (not SPI). In slave mode, $\overline{SS}$ pin function is slave select input. When C2[MODFEN] is 1: In master mode, $\overline{SS}$ pin function is automatic $\overline{SS}$ output. In slave mode: $\overline{SS}$ pin function is slave select input.
0 LSBFE	LSB First (shifter direction) This bit does not affect the position of the MSB and LSB in the data register. Reads and writes of the data register always have the MSB in bit 7. 0 SPI serial data transfers start with the most significant bit. 1 SPI serial data transfers start with the least significant bit.

29.3.2 SPI Control Register 2 (SPIx_C2)

This read/write register is used to control optional features of the SPI system. Bit 6 is not implemented and always reads 0.

Address: 4007_6000h base + 1h offset = 4007_6001h

Bit	7	6	5	4	3	2	1	0
Read Write	SPMIE	Reserved	Reserved	MODFEN	BIDIROE	Reserved	SPISWAI	SPC0
Reset	0	0	0	0	0	0	0	0

SPI0_C2 field descriptions

Field	Description
7 SPMIE	SPI Match Interrupt Enable This is the interrupt enable bit for the SPI receive data buffer hardware match (SPMF) function. 0 Interrupts from SPMF inhibited (use polling) 1 When SPMF is 1, requests a hardware interrupt
6 Reserved	This field is reserved. Do not write to this reserved bit.
5 Reserved	This field is reserved. Do not write to this reserved bit.
4 MODFEN	Master Mode-Fault Function Enable When the SPI is configured for slave mode, this bit has no meaning or effect. (The $\overline{SS}$ pin is the slave select input.) In master mode, this bit determines how the $\overline{SS}$ pin is used. For details, refer to the description of the SSOE bit in the C1 register.

Table continues on the next page...

SPI0_C2 field descriptions (continued)

Field	Description
	0 Mode fault function disabled, master $\overline{SS}$ pin reverts to general-purpose I/O not controlled by SPI 1 Mode fault function enabled, master $\overline{SS}$ pin acts as the mode fault input or the slave select output
3 BIDIROE	Bidirectional Mode Output Enable When bidirectional mode is enabled because SPI pin control 0 (SPC0) is set to 1, BIDIROE determines whether the SPI data output driver is enabled to the single bidirectional SPI I/O pin. Depending on whether the SPI is configured as a master or a slave, it uses the MOSI (MOMI) or MISO (SISO) pin, respectively, as the single SPI data I/O pin. When SPC0 is 0, BIDIROE has no meaning or effect. 0 Output driver disabled so SPI data I/O pin acts as an input 1 SPI I/O pin enabled as an output
2 Reserved	This field is reserved. Do not write to this reserved bit.
1 SPISWAI	SPI Stop in Wait Mode This bit is used for power conservation while the device is in Wait mode. 0 SPI clocks continue to operate in Wait mode. 1 SPI clocks stop when the MCU enters Wait mode.
0 SPC0	SPI Pin Control 0 Enables bidirectional pin configurations. 0 SPI uses separate pins for data input and data output (pin mode is normal). In master mode of operation: MISO is master in and MOSI is master out. In slave mode of operation: MISO is slave out and MOSI is slave in. 1 SPI configured for single-wire bidirectional operation (pin mode is bidirectional). In master mode of operation: MISO is not used by SPI; MOSI is master in when BIDIROE is 0 or master I/O when BIDIROE is 1. In slave mode of operation: MISO is slave in when BIDIROE is 0 or slave I/O when BIDIROE is 1; MOSI is not used by SPI.

29.3.3 SPI Baud Rate Register (SPIx_BR)

Use this register to set the prescaler and bit rate divisor for an SPI master. This register may be read or written at any time.

Address: 4007_6000h base + 2h offset = 4007_6002h

Bit	7	6	5	4	3	2	1	0
Read Write	0	SPPR[2:0]			SPR[3:0]			
Reset	0	0	0	0	0	0	0	0

SPI0_BR field descriptions

Field	Description
7 Reserved	This field is reserved. This read-only field is reserved and always has the value 0.
6–4 SPPR[2:0]	SPI Baud Rate Prescale Divisor This 3-bit field selects one of eight divisors for the SPI baud rate prescaler. The input to this prescaler is the bus rate clock (BUSCLK). The output of this prescaler drives the input of the SPI baud rate divider. Refer to the description of “SPI Baud Rate Generation” for details. 000 Baud rate prescaler divisor is 1. 001 Baud rate prescaler divisor is 2. 010 Baud rate prescaler divisor is 3. 011 Baud rate prescaler divisor is 4. 100 Baud rate prescaler divisor is 5. 101 Baud rate prescaler divisor is 6. 110 Baud rate prescaler divisor is 7. 111 Baud rate prescaler divisor is 8.
SPR[3:0]	SPI Baud Rate Divisor This 4-bit field selects one of nine divisors for the SPI baud rate divider. The input to this divider comes from the SPI baud rate prescaler. Refer to the description of “SPI Baud Rate Generation” for details. 0000 Baud rate divisor is 2. 0001 Baud rate divisor is 4. 0010 Baud rate divisor is 8. 0011 Baud rate divisor is 16. 0100 Baud rate divisor is 32. 0101 Baud rate divisor is 64. 0110 Baud rate divisor is 128. 0111 Baud rate divisor is 256. 1000 Baud rate divisor is 512. All others Reserved

29.3.4 SPI Status Register (SPIx_S)

This register contains read-only status bits. Writes have no meaning or effect.

NOTE

Bits 3 through 0 are not implemented and always read 0.

Address: 4007_6000h base + 3h offset = 4007_6003h

Bit	7	6	5	4	3	2	1	0
Read	SPRF	SPMF	SPTEF	MODF	0			
Write								
Reset	0	0	1	0	0	0	0	0

SPI0_S field descriptions

Field	Description
7 SPRF	SPI Read Buffer Full Flag SPRF is set at the completion of an SPI transfer to indicate that received data may be read from the SPI data (D) register. SPRF is cleared by reading SPRF while it is set and then reading the SPI data register. 0 No data available in the receive data buffer 1 Data available in the receive data buffer
6 SPMF	SPI Match Flag SPMF is set after SPRF is 1 when the value in the receive data buffer matches the value in the M register. To clear the flag, read SPMF when it is set and then write a 1 to it. 0 Value in the receive data buffer does not match the value in the M register 1 Value in the receive data buffer matches the value in the M register
5 SPTEF	SPI Transmit Buffer Empty Flag This bit is set when the transmit data buffer is empty. SPTEF is cleared by reading the S register with SPTEF set and then writing a data value to the transmit buffer at D. The S register must be read with SPTEF set to 1 before writing data to the D register; otherwise, the D write is ignored. SPTEF is automatically set when all data from the transmit buffer transfers into the transmit shift register. For an idle SPI, data written to D is transferred to the shifter almost immediately so that SPTEF is set within two bus cycles, allowing a second set of data to be queued into the transmit buffer. After completion of the transfer of the data in the shift register, the queued data from the transmit buffer automatically moves to the shifter, and SPTEF is set to indicate that room exists for new data in the transmit buffer. If no new data is waiting in the transmit buffer, SPTEF simply remains set and no data moves from the buffer to the shifter. If a transfer does not stop, the last data that was transmitted is sent out again. 0 SPI transmit buffer not empty 1 SPI transmit buffer empty
4 MODF	Master Mode Fault Flag MODF is set if the SPI is configured as a master and the slave select input goes low, indicating some other SPI device is also configured as a master. The $\overline{SS}$ pin acts as a mode fault error input only when C1[MSTR] is 1, C2[MODFEN] is 1, and C1[SSOE] is 0; otherwise, MODF will never be set. MODF is cleared by reading MODF while it is 1 and then writing to the SPI Control Register 1 (C1). 0 No mode fault error 1 Mode fault error detected
Reserved	This field is reserved. This read-only field is reserved and always has the value 0.

29.3.5 SPI Data Register (SPIx_D)

This register is both the input and output register for SPI data. A write to the register writes to the transmit data buffer, allowing data to be queued and transmitted.

When the SPI is configured as a master, data queued in the transmit data buffer is transmitted immediately after the previous transmission has completed.

The SPTEF bit in the S register indicates when the transmit data buffer is ready to accept new data. The S register must be read when S[SPTEF] is set before writing to the SPI data register; otherwise, the write is ignored.

Data may be read from the SPI data register any time after S[SPRF] is set and before another transfer is finished. Failure to read the data out of the receive data buffer before a new transfer ends causes a receive overrun condition, and the data from the new transfer is lost. The new data is lost because the receive buffer still held the previous character and was not ready to accept the new data. There is no indication for a receive overrun condition, so the application system designer must ensure that previous data has been read from the receive buffer before a new transfer is initiated.

Address: 4007_6000h base + 5h offset = 4007_6005h

Bit	7	6	5	4	3	2	1	0
Read Write	Bits[7:0]							
Reset	0	0	0	0	0	0	0	0

SPI0_D field descriptions

Field	Description
Bits[7:0]	Data (low byte)

29.3.6 SPI Match Register (SPIx_M)

This register contains the hardware compare value. When the value received in the SPI receive data buffer equals this hardware compare value, the SPI Match Flag in the S register (S[SPMF]) sets.

Address: 4007_6000h base + 7h offset = 4007_6007h

Bit	7	6	5	4	3	2	1	0
Read Write	Bits[7:0]							
Reset	0	0	0	0	0	0	0	0

SPI0_M field descriptions

Field	Description
Bits[7:0]	Hardware compare value (low byte)

29.4 Functional description

This section provides the functional description of the module.

29.4.1 General

The SPI system is enabled by setting the SPI enable (SPE) bit in SPI Control Register 1. While C1[SPE] is set, the four associated SPI port pins are dedicated to the SPI function as:

- Slave select (SS)
- Serial clock (SPSCK)
- Master out/slave in (MOSI)
- Master in/slave out (MISO)

An SPI transfer is initiated in the master SPI device by reading the SPI status register (SPIx_S) when S[SPTEF] = 1 and then writing data to the transmit data buffer (write to SPIxD). When a transfer is complete, received data is moved into the receive data buffer. The SPIxD register acts as the SPI receive data buffer for reads and as the SPI transmit data buffer for writes.

The Clock Phase Control (CPHA) and Clock Polarity Control (CPOL) bits in the SPI Control Register 1 (SPIx_C1) select one of four possible clock formats to be used by the SPI system. The CPOL bit simply selects a non-inverted or inverted clock. C1[CPHA] is used to accommodate two fundamentally different protocols by sampling data on odd numbered SPSCK edges or on even numbered SPSCK edges.

The SPI can be configured to operate as a master or as a slave. When the MSTR bit in SPI Control Register 1 is set, master mode is selected; when C1[MSTR] is clear, slave mode is selected.

29.4.2 Master mode

The SPI operates in master mode when C1[MSTR] is set. Only a master SPI module can initiate transmissions. A transmission begins by reading the SPIx_S register while S[SPTEF] = 1 and writing to the master SPI data registers. If the shift register is empty, the byte immediately transfers to the shift register. The data begins shifting out on the MOSI pin under the control of the serial clock.

- SPSCK
  - The SPR3, SPR2, SPR1, and SPR0 baud rate selection bits in conjunction with the SPPR2, SPPR1, and SPPR0 baud rate preselection bits in the SPI Baud Rate register control the baud rate generator and determine the speed of the transmission. The SPSCK pin is the SPI clock output. Through the SPSCK pin, the baud rate generator of the master controls the shift register of the slave peripheral.
- MOSI, MISO pin
  - In master mode, the function of the serial data output pin (MOSI) and the serial data input pin (MISO) is determined by the SPC0 and BIDIROE control bits.
- $\overline{SS}$ pin
  - If C2[MODFEN] and C1[SSOE] are set, the SS pin is configured as slave select output. The SS output becomes low during each transmission and is high when the SPI is in idle state. If C2[MODFEN] is set and C1[SSOE] is cleared, the $\overline{SS}$ pin is configured as input for detecting mode fault error. If the SS input becomes low this indicates a mode fault error where another master tries to drive the MOSI and SPSCK lines. In this case, the SPI immediately switches to slave mode by clearing C1[MSTR] and also disables the slave output buffer MISO (or SISO in bidirectional mode). As a result, all outputs are disabled, and SPSCK, MOSI and MISO are inputs. If a transmission is in progress when the mode fault occurs, the transmission is aborted and the SPI is forced into idle state. This mode fault error also sets the Mode Fault (MODF) flag in the SPI Status Register (SPIx_S). If the SPI Interrupt Enable bit (SPIE) is set when S[MODF] gets set, then an SPI interrupt sequence is also requested. When a write to the SPI Data Register in the master occurs, there is a half SPSCK-cycle delay. After the delay, SPSCK is started within the master. The rest of the transfer operation differs slightly, depending on the clock format specified by the SPI clock phase bit, CPHA, in SPI Control Register 1 (see SPI clock formats).

Note

A change of C1[CPOL], C1[CPHA], C1[SSOE], C1[LSBFE], C2[MODFEN], C2[SPC0], C2[BIDIROE] with C2[SPC0] set, SPPR2-SPPR0 and SPR3-SPR0 in master mode abort a transmission in progress and force the SPI into idle state. The remote slave cannot detect this, therefore the master has to ensure that the remote slave is set back to idle state.

29.4.3 Slave mode

The SPI operates in slave mode when the MSTR bit in SPI Control Register 1 is clear.

- SPSCK

  In slave mode, SPSCK is the SPI clock input from the master.

- MISO, MOSI pin

  In slave mode, the function of the serial data output pin (MISO) and serial data input pin (MOSI) is determined by the SPC0 bit and BIDIROE bit in SPI Control Register 2.

- SS pin

  The SS pin is the slave select input. Before a data transmission occurs, the SS pin of the slave SPI must be low. SS must remain low until the transmission is complete. If SS goes high, the SPI is forced into an idle state.

  The SS input also controls the serial data output pin. If SS is high (not selected), the serial data output pin is high impedance. If SS is low, the first bit in the SPI Data Register is driven out of the serial data output pin. Also, if the slave is not selected (SS is high), then the SPSCK input is ignored and no internal shifting of the SPI shift register occurs.

  Although the SPI is capable of duplex operation, some SPI peripherals are capable of only receiving SPI data in a slave mode. For these simpler devices, there is no serial data out pin.

Note

When peripherals with duplex capability are used, take care not to simultaneously enable two receivers whose serial outputs drive the same system slave's serial data output line.

As long as no more than one slave device drives the system slave's serial data output line, it is possible for several slaves to receive the same transmission from a master, although the master would not receive return information from all of the receiving slaves.

If the CPHA bit in SPI Control Register 1 is clear, odd numbered edges on the SPSCK input cause the data at the serial data input pin to be latched. Even numbered edges cause the value previously latched from the serial data input pin to shift into the LSB or MSB of the SPI shift register, depending on the LSBFE bit.

If C1[CPHA] is set, even numbered edges on the SPSCK input cause the data at the serial data input pin to be latched. Odd numbered edges cause the value previously latched from the serial data input pin to shift into the LSB or MSB of the SPI shift register, depending on C1[LSBFE].

When C1[CPHA] is set, the first edge is used to get the first data bit onto the serial data output pin. When C1[CPHA] is clear and the SS input is low (slave selected), the first bit of the SPI data is driven out of the serial data output pin. After the eighth shift, the transfer is considered complete and the received data is transferred into the SPI Data register. To indicate transfer is complete, the SPRF flag in the SPI Status Register is set.

Note

A change of the bits C2[BIDIROE] with C2[SPC0] set, C1[CPOL], C1[CPHA], C1[SSOE], C1[LSBFE], C2[MODFEN], and C2[SPC0] in slave mode will corrupt a transmission in progress and must be avoided.

29.4.4 SPI clock formats

To accommodate a wide variety of synchronous serial peripherals from different manufacturers, the SPI system has a Clock Polarity (CPOL) bit and a Clock Phase (CPHA) control bit in the Control Register 1 to select one of four clock formats for data transfers. C1[CPOL] selectively inserts an inverter in series with the clock. C1[CPHA] chooses between two different clock phase relationships between the clock and data.

The following figure shows the clock formats when CPHA = 1. At the top of the figure, the eight bit times are shown for reference with bit 1 starting at the first SPSCK edge and bit 8 ending one-half SPSCK cycle after the eighth SPSCK edge. The MSB first and LSB first lines show the order of SPI data bits depending on the setting in LSBFE. Both variations of SPSCK polarity are shown, but only one of these waveforms applies for a specific transfer, depending on the value in C1[CPOL]. The SAMPLE IN waveform applies to the MOSI input of a slave or the MISO input of a master. The MOSI waveform applies to the MOSI output pin from a master and the MISO waveform applies to the MISO output from a slave. The $\overline{SS}$ OUT waveform applies to the slave select output from a master (provided C2[MODFEN] and C1[SSOE] = 1). The master $\overline{SS}$ output goes to active low one-half SPSCK cycle before the start of the transfer and goes back high at the end of the eighth bit time of the transfer. The $\overline{SS}$ IN waveform applies to the slave select input of a slave.

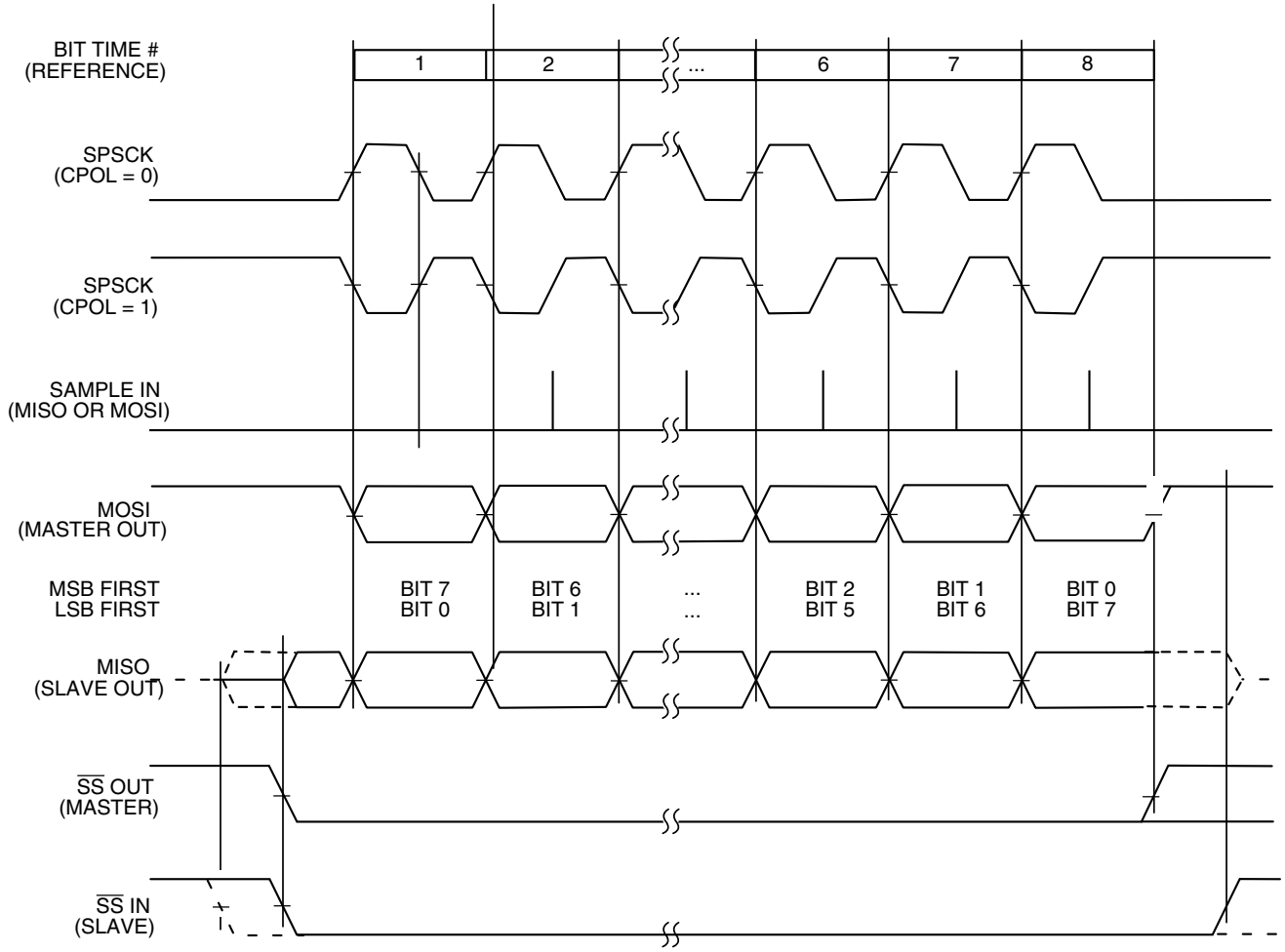

Figure 29-15. SPI clock formats (CPHA = 1)

When C1[CPHA] = 1, the slave begins to drive its MISO output when $\overline{SS}$ goes to active low, but the data is not defined until the first SPSCK edge. The first SPSCK edge shifts the first bit of data from the shifter onto the MOSI output of the master and the MISO output of the slave. The next SPSCK edge causes both the master and the slave to sample the data bit values on their MISO and MOSI inputs, respectively. At the third SPSCK edge, the SPI shifter shifts one bit position which shifts in the bit value that was just sampled, and shifts the second data bit value out the other end of the shifter to the MOSI and MISO outputs of the master and slave, respectively.

When C1[CPHA] = 1, the slave's $\overline{SS}$ input is not required to go to its inactive high level between transfers. In this clock format, a back-to-back transmission can occur, as follows:

1. A transmission is in progress.
2. A new data byte is written to the transmit buffer before the in-progress transmission is complete.
3. When the in-progress transmission is complete, the new, ready data byte is transmitted immediately.

Between these two successive transmissions, no pause is inserted; the $\overline{SS}$ pin remains low.

The following figure shows the clock formats when C1[CPHA] = 0. At the top of the figure, the eight bit times are shown for reference with bit 1 starting as the slave is selected (SS IN goes low), and bit 8 ends at the last SPSCK edge. The MSB first and LSB first lines show the order of SPI data bits depending on the setting in LSBFE. Both variations of SPSCK polarity are shown, but only one of these waveforms applies for a specific transfer, depending on the value in CPOL. The SAMPLE IN waveform applies to the MOSI input of a slave or the MISO input of a master. The MOSI waveform applies to the MOSI output pin from a master and the MISO waveform applies to the MISO output from a slave. The SS OUT waveform applies to the slave select output from a master (provided C2[MODFEN] and C1[SSOE] = 1). The master SS output goes to active low at the start of the first bit time of the transfer and goes back high one-half SPSCK cycle after the end of the eighth bit time of the transfer. The SS IN waveform applies to the slave select input of a slave.

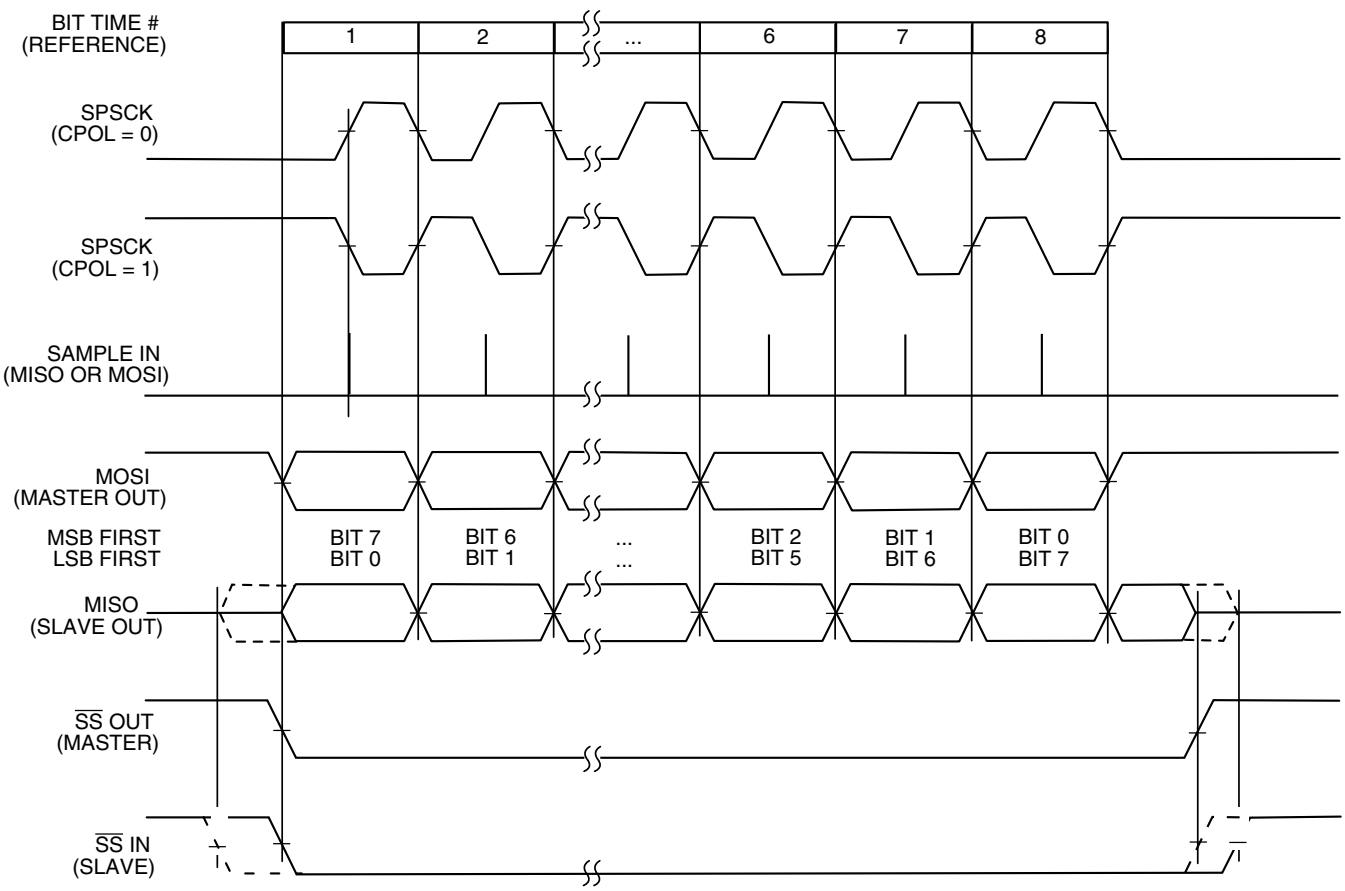

Figure 29-16. SPI clock formats (CPHA = 0)

When C1[CPHA] = 0, the slave begins to drive its MISO output with the first data bit value (MSB or LSB depending on LSBFE) when SS goes to active low. The first SPSCK edge causes both the master and the slave to sample the data bit values on their MISO and MOSI inputs, respectively. At the second SPSCK edge, the SPI shifter shifts one bit position which shifts in the bit value that was just sampled and shifts the second data bit value out the other end of the shifter to the MOSI and MISO outputs of the master and slave, respectively. When C1[CPHA] = 0, the slave's SS input must go to its inactive high level between transfers.

29.4.5 SPI baud rate generation

As shown in the following figure, the clock source for the SPI baud rate generator is the bus clock. The three prescale bits (SPPR2:SPPR1:SPPR0) choose a prescale divisor of 1, 2, 3, 4, 5, 6, 7, or 8. The three rate select bits (SPR3:SPR2:SPR1:SPR0) divide the output of the prescaler stage by 2, 4, 8, 16, 32, 64, 128, 256, or 512 to get the internal SPI master mode bit-rate clock.

The baud rate generator is activated only when the SPI is in the master mode and a serial transfer is taking place. In the other cases, the divider is disabled to decrease I_{DD} current.

The baud rate divisor equation is as follows (except those reserved combinations in the SPI Baud Rate Divisor table).

$$\text{BaudRateDivisor} = (\text{SPPR} + 1) \times 2^{(\text{SPR} + 1)}$$

The baud rate can be calculated with the following equation:

$$\text{BaudRate} = \text{BusClock} / \text{BaudRateDivisor}$$

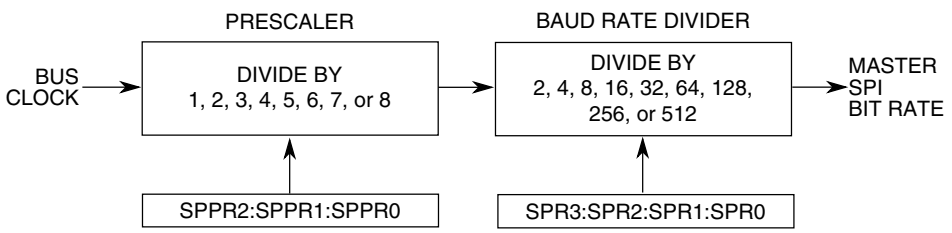

Figure 29-17. SPI baud rate generation

29.4.6 Special features

The following section describes the special features of SPI module.

29.4.6.1 $\overline{SS}$ Output

The $\overline{SS}$ output feature automatically drives the $\overline{SS}$ pin low during transmission to select external devices and drives the $\overline{SS}$ pin high during idle to deselect external devices. When the $\overline{SS}$ output is selected, the $\overline{SS}$ output pin is connected to the $\overline{SS}$ input pin of the external device.

The $\overline{SS}$ output is available only in master mode during normal SPI operation by asserting C1[SSOE] and C2[MODFEN] as shown in the description of C1[SSOE].

The mode fault feature is disabled while $\overline{SS}$ output is enabled.

Note

Be careful when using the $\overline{SS}$ output feature in a multimaster system because the mode fault feature is not available for detecting system errors between masters.

29.4.6.2 Bidirectional mode (MOMI or SISO)

The bidirectional mode is selected when the SPC0 bit is set in SPI Control Register 2 (see the following table). In this mode, the SPI uses only one serial data pin for the interface with one or more external devices. C1[MSTR] decides which pin to use. The MOSI pin becomes the serial data I/O (MOMI) pin for the master mode, and the MISO pin becomes serial data I/O (SISO) pin for the slave mode. The MISO pin in master mode and MOSI pin in slave mode are not used by the SPI.

Table 29-15. Normal Mode and Bidirectional Mode

When SPE = 1	Master Mode MSTR = 1	Slave Mode MSTR = 0
Normal Mode **SPC0 = 0**	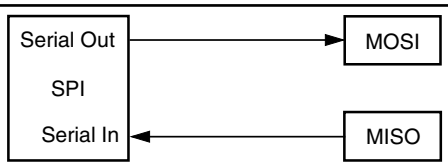	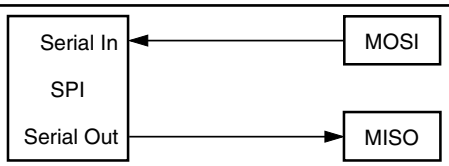
Bidirectional Mode **SPC0 = 1**	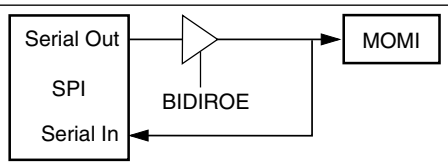	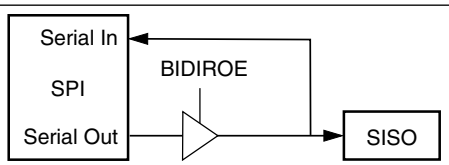

The direction of each serial I/O pin depends on C2[BIDIROE]. If the pin is configured as an output, serial data from the shift register is driven out on the pin. The same pin is also the serial input to the shift register.

The SPSCK is an output for the master mode and an input for the slave mode.

$\overline{SS}$ is the input or output for the master mode, and it is always the input for the slave mode.

The bidirectional mode does not affect SPSCK and $\overline{SS}$ functions.

Note

In bidirectional master mode, with the mode fault feature enabled, both data pins MISO and MOSI can be occupied by the SPI, though MOSI is normally used for transmissions in bidirectional mode and MISO is not used by the SPI. If a mode fault occurs, the SPI is automatically switched to slave mode. In this case, MISO becomes occupied by the SPI and MOSI is not used. Consider this scenario if the MISO pin is used for another purpose.

29.4.7 Error conditions

The SPI module has one error condition: the mode fault error.

29.4.7.1 Mode fault error

If the $\overline{SS}$ input becomes low while the SPI is configured as a master, it indicates a system error where more than one master may be trying to drive the MOSI and SPSCK lines simultaneously. This condition is not permitted in normal operation, and it sets the MODF bit in the SPI status register automatically provided that C2[MODFEN] is set.

In the special case where the SPI is in master mode and C2[MODFEN] is cleared, the $\overline{SS}$ pin is not used by the SPI. In this special case, the mode fault error function is inhibited and MODF remains cleared. If the SPI system is configured as a slave, the $\overline{SS}$ pin is a dedicated input pin. A mode fault error does not occur in slave mode.

If a mode fault error occurs, the SPI is switched to slave mode, with the exception that the slave output buffer is disabled. So the SPSCK, MISO and MOSI pins are forced to be high impedance inputs to avoid any possibility of conflict with another output driver. A transmission in progress is aborted and the SPI is forced into idle state.

If the mode fault error occurs in the bidirectional mode for an SPI system configured in master mode, the output enable of MOMI (MOSI in bidirectional mode) is cleared if it was set. No mode fault error occurs in the bidirectional mode for the SPI system configured in slave mode.

The mode fault flag is cleared automatically by a read of the SPI Status Register (with MODF set) followed by a write to SPI Control Register 1. If the mode fault flag is cleared, the SPI becomes a normal master or slave again.

29.4.8 Low-power mode options

This section describes the low-power mode options.

29.4.8.1 SPI in Run mode

In Run mode, with the SPI system enable (SPE) bit in the SPI Control Register 1 clear, the SPI system is in a low-power, disabled state. SPI registers can still be accessed, but clocks to the core of this module are disabled.

29.4.8.2 SPI in Wait mode

SPI operation in Wait mode depends upon the state of the SPISWAI bit in SPI Control Register 2.

- If C2[SPISWAI] is clear, the SPI operates normally when the CPU is in Wait mode.
- If C2[SPISWAI] is set, SPI clock generation ceases and the SPI module enters a power conservation state when the CPU is in wait mode.
  - If C2[SPISWAI] is set and the SPI is configured for master, any transmission and reception in progress stops at Wait mode entry. The transmission and reception resumes when the SPI exits Wait mode.
  - If C2[SPISWAI] is set and the SPI is configured as a slave, any transmission and reception in progress continues if the SPSCK continues to be driven from the master. This keeps the slave synchronized to the master and the SPSCK.

    If the master transmits data while the slave is in wait mode, the slave continues to send data consistent with the operation mode at the start of wait mode (that is, if the slave is currently sending its SPIx_D to the master, it continues to send the same byte. Otherwise, if the slave is currently sending the last data received byte from the master, it continues to send each previously received data from the master byte).

Note

Care must be taken when expecting data from a master while the slave is in a Wait mode or a Stop mode where the peripheral bus clock is stopped but internal logic states are retained. Even though the shift register continues to operate, the rest of the SPI is shut down (that is, an SPRF interrupt is not generated until an exit from Stop or Wait mode). Also, the data from the shift register is not copied into the SPIx_D registers until after the slave SPI has exited Wait or Stop mode. An SPRF flag and SPIx_D copy is only generated if Wait mode is entered or exited during a transmission. If the slave enters Wait mode in idle mode and exits Wait mode in idle mode, neither an SPRF nor a SPIx_D copy occurs.

29.4.8.3 SPI in Stop mode

Operation in a Stop mode where the peripheral bus clock is stopped but internal logic states are retained depends on the SPI system. The Stop mode does not depend on C2[SPISWAI]. Upon entry to this type of stop mode, the SPI module clock is disabled (held high or low).

- If the SPI is in master mode and exchanging data when the CPU enters the Stop mode, the transmission is frozen until the CPU exits stop mode. After the exit from stop mode, data to and from the external SPI is exchanged correctly.
- In slave mode, the SPI remains synchronized with the master.

The SPI is completely disabled in a stop mode where the peripheral bus clock is stopped and internal logic states are not retained. After an exit from this type of stop mode, all registers are reset to their default values, and the SPI module must be reinitialized.

29.4.9 Reset

The reset values of registers and signals are described in the Memory Map and Register Descriptions content, which details the registers and their bitfields.

- If a data transmission occurs in slave mode after a reset without a write to SPIx_D, the transmission consists of "garbage" or the data last received from the master before the reset.
- Reading from SPIx_D after reset always returns zeros.

29.4.10 Interrupts

The SPI originates interrupt requests only when the SPI is enabled (the SPE bit in the SPIx_C1 register is set). The following is a description of how the SPI makes a request and how the MCU should acknowledge that request. The interrupt vector offset and interrupt priority are chip dependent.

Four flag bits, three interrupt mask bits, and one interrupt vector are associated with the SPI system. The SPI interrupt enable mask (SPIE) enables interrupts from the SPI receiver full flag (SPRF) and mode fault flag (MODF). The SPI transmit interrupt enable mask (SPTIE) enables interrupts from the SPI transmit buffer empty flag (SPTEF). The SPI match interrupt enable mask bit (SPIMIE) enables interrupts from the SPI match flag (SPMF). When one of the flag bits is set, and the associated interrupt mask bit is set, a hardware interrupt request is sent to the CPU. If the interrupt mask bits are cleared, software can poll the associated flag bits instead of using interrupts. The SPI interrupt service routine (ISR) should check the flag bits to determine which event caused the interrupt. The service routine should also clear the flag bit(s) before returning from the ISR (usually near the beginning of the ISR).

29.4.10.1 MODF

MODF occurs when the master detects an error on the $\overline{SS}$ pin. The master SPI must be configured for the MODF feature (see the description of the C1[SSOE] bit). Once MODF is set, the current transfer is aborted and the master (MSTR) bit in the SPIx_C1 register resets to 0.

The MODF interrupt is reflected in the status register's MODF flag. Clearing the flag also clears the interrupt. This interrupt stays active while the MODF flag is set. MODF has an automatic clearing process that is described in the SPI Status Register.

29.4.10.2 SPRF

SPRF occurs when new data has been received and copied to the SPI receive data buffer.

After SPRF is set, it does not clear until it is serviced. SPRF has an automatic clearing process that is described in the SPI Status Register details. If the SPRF is not serviced before the end of the next transfer (that is, SPRF remains active throughout another transfer), the subsequent transfers are ignored and no new data is copied into the Data register.

29.4.10.3 SPTEF

SPTEF occurs when the SPI transmit buffer is ready to accept new data.

After SPTEF is set, it does not clear until it is serviced. SPTEF has an automatic clearing process that is described in the SPI Status Register details.

29.4.10.4 SPMF

SPMF occurs when the data in the receive data buffer is equal to the data in the SPI Match Register.

29.4.10.5 Asynchronous interrupt in low-power modes

When the CPU is in Wait mode or Stop mode and the SPI module receives a transmission, the SPI module can generate an asynchronous interrupt to wake the CPU from the low power mode. The module generates the asynchronous interrupt only when all of the following conditions apply:

1. C1[SPIE] is set to 1.
2. The CPU is in Wait mode—in which case C2[SPISWAI] must be 1—or in Stop mode where the peripheral bus clock is stopped but internal logic states are retained.
3. The SPI module is in slave mode.
4. The received transmission ends.

After the interrupt wakes the CPU and the peripheral bus clock is active again, the SPI module copies the received data from the shifter into the Data register and generates flags signals. During the wakeup phase, a continuous transmission from a master would destroy the first received data.

29.5 Initialization/application information

This section discusses an example of how to initialize and use the SPI.

29.5.1 Initialization sequence

Before the SPI module can be used for communication, an initialization procedure must be carried out, as follows:

1. Update the Control Register 1 (SPIx_C1) to enable the SPI and to control interrupt enables. This register also sets the SPI as master or slave, determines clock phase and polarity, and configures the main SPI options.
2. Update the Control Register 2 (SPIx_C2) to enable additional SPI functions such as the SPI match interrupt feature, the master mode-fault function, and bidirectional mode output as well as to control and other optional features.
3. Update the Baud Rate Register (SPIx_BR) to set the prescaler and bit rate divisor for an SPI master.
4. Update the Hardware Match Register (SPIx_M) with the value to be compared to the receive data register for triggering an interrupt if hardware match interrupts are enabled.
5. In the master, read SPIx_S while S[SPTEF] = 1, and then write to the transmit data register (SPIx_D) to begin transfer.

29.5.2 Pseudo-Code Example

In this example, the SPI module is set up for master mode with only hardware match interrupts enabled. The SPI runs at a maximum baud rate of bus clock divided by 2. Clock phase and polarity are set for an active-high SPI clock where the first edge on SPSCK occurs at the start of the first cycle of a data transfer.

SPIx_C1=0x54(%01010100)				
Bit 7	SPIE	=	0	Disables receive and mode fault interrupts
Bit 6	SPE	=	1	Enables the SPI system
Bit 5	SPTIE	=	0	Disables SPI transmit interrupts
Bit 4	MSTR	=	1	Sets the SPI module as a master SPI device
Bit 3	CPOL	=	0	Configures SPI clock as active-high
Bit 2	CPHA	=	1	First edge on SPSCK at start of first data transfer cycle
Bit 1	SSOE	=	0	Determines SS pin function when mode fault enabled
Bit 0	LSBFE	=	0	SPI serial data transfers start with most significant bit

SPIx_C2 = 0x80(%10000000)				
Bit 7	SPMIE	=	1	SPI hardware match interrupt enabled
Bit 6		=	0	Unimplemented
Bit 5		=	0	Reserved
Bit 4	MODFEN	=	0	Disables mode fault function
Bit 3	BIDIROE	=	0	SPI data I/O pin acts as input

Table continues on the next page...

SPIx_C2 = 0x80(%10000000)				
Bit 2		=	0	Reserved
Bit 1	SPISWAI	=	0	SPI clocks operate in wait mode
Bit 0	SPC0	=	0	uses separate pins for data input and output

SPIx_BR = 0x00(%00000000)			
Bit 7	=	0	Reserved
Bit 6:4	=	000	Sets prescale divisor to 1
Bit 3:0	=	0000	Sets baud rate divisor to 2

SPIx_S = 0x00(%00000000)				
Bit 7	SPRF	=	0	Flag is set when receive data buffer is full
Bit 6	SPMF	=	0	Flag is set when SPIx_M = receive data buffer
Bit 5	SPTEF	=	0	Flag is set when transmit data buffer is empty
Bit 4	MODF	=	0	Mode fault flag for master mode
Bit 3:0		=	0	Reserved

SPIx_M = 0xXX
Holds bits 0–7 of the hardware match buffer.

SPIx_D = 0xxx
Holds bits 0–7 of the data to be transmitted by the transmit buffer and received by the receive buffer.

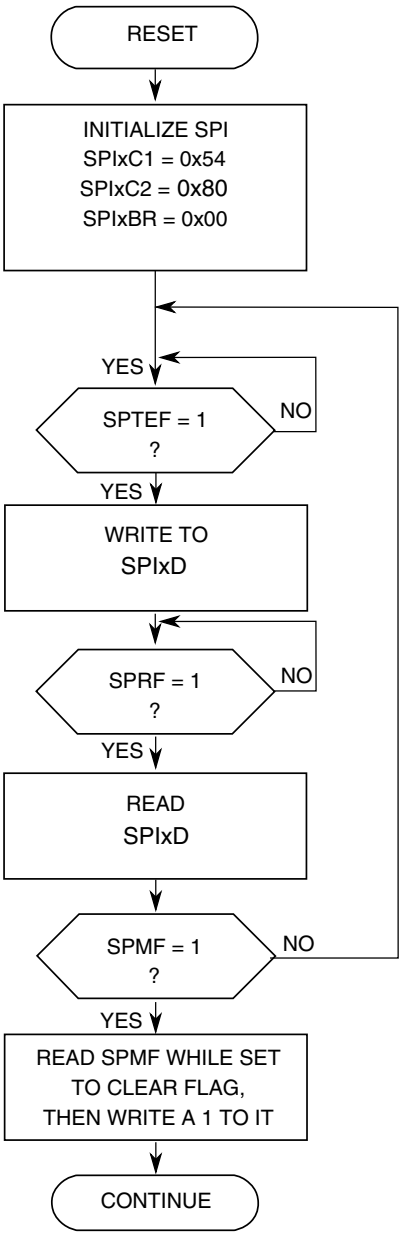

Figure 29-18. Initialization Flowchart Example for SPI Master Device

Chapter 30
Inter-Integrated Circuit (I2C)

30.1 Introduction

NOTE

For the chip-specific implementation details of this module's instances, see the chip configuration information.

The inter-integrated circuit (I^2C, I2C, or IIC) module provides a method of communication between a number of devices. The interface is designed to operate up to 100 kbit/s with maximum bus loading and timing. The I2C device is capable of operating at higher baud rates, up to a maximum of clock/20, with reduced bus loading. The maximum communication length and the number of devices that can be connected are limited by a maximum bus capacitance of 400 pF.

30.1.1 Features

The I2C module has the following features:

- Compatible with *The I^2C-Bus Specification*
- Multimaster operation
- Software programmable for one of 64 different serial clock frequencies
- Software-selectable acknowledge bit
- Interrupt-driven byte-by-byte data transfer
- Arbitration-lost interrupt with automatic mode switching from master to slave
- Calling address identification interrupt
- START and STOP signal generation and detection
- Repeated START signal generation and detection
- Acknowledge bit generation and detection
- Bus busy detection
- General call recognition
- 10-bit address extension

- Programmable glitch input filter
- Low power mode wakeup on slave address match
- Range slave address support

30.1.2 Modes of operation

The I2C module's operation in various low power modes is as follows:

- Run mode: This is the basic mode of operation. To conserve power in this mode, disable the module.
- Wait mode: The module continues to operate when the core is in Wait mode and can provide a wakeup interrupt.
- Stop mode: The module is inactive in Stop mode for reduced power consumption, except that address matching is enabled in Stop mode. The STOP instruction does not affect the I2C module's register states.

30.1.3 Block diagram

The following figure is a functional block diagram of the I2C module.

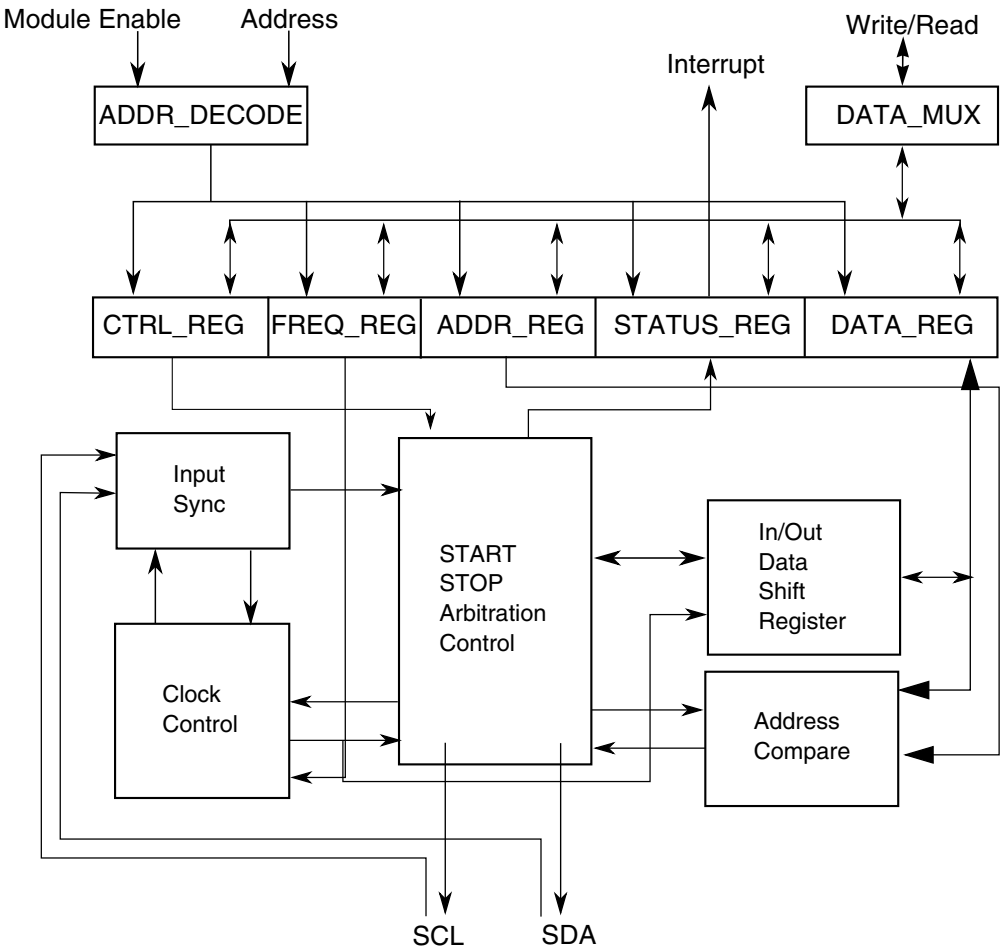

Figure 30-1. I2C Functional block diagram

30.2 I²C signal descriptions

The signal properties of I²C are shown in the following table.

Table 30-1. I²C signal descriptions

Signal	Description	I/O
SCL	Bidirectional serial clock line of the I²C system.	I/O
SDA	Bidirectional serial data line of the I²C system.	I/O

30.3 Memory map and register descriptions

This section describes in detail all I2C registers accessible to the end user.

I2C memory map

Absolute address (hex)	Register name	Width (in bits)	Access	Reset value	Section/ page
4006_6000	I2C Address Register 1 (I2C0_A1)	8	R/W	00h	30.3.1/476
4006_6001	I2C Frequency Divider register (I2C0_F)	8	R/W	00h	30.3.2/477
4006_6002	I2C Control Register 1 (I2C0_C1)	8	R/W	00h	30.3.3/478
4006_6003	I2C Status register (I2C0_S)	8	R/W	80h	30.3.4/479
4006_6004	I2C Data I/O register (I2C0_D)	8	R/W	00h	30.3.5/481
4006_6005	I2C Control Register 2 (I2C0_C2)	8	R/W	00h	30.3.6/481
4006_6006	I2C Programmable Input Glitch Filter register (I2C0_FLT)	8	R/W	00h	30.3.7/482
4006_6007	I2C Range Address register (I2C0_RA)	8	R/W	00h	30.3.8/484
4006_7000	I2C Address Register 1 (I2C1_A1)	8	R/W	00h	30.3.1/476
4006_7001	I2C Frequency Divider register (I2C1_F)	8	R/W	00h	30.3.2/477
4006_7002	I2C Control Register 1 (I2C1_C1)	8	R/W	00h	30.3.3/478
4006_7003	I2C Status register (I2C1_S)	8	R/W	80h	30.3.4/479
4006_7004	I2C Data I/O register (I2C1_D)	8	R/W	00h	30.3.5/481
4006_7005	I2C Control Register 2 (I2C1_C2)	8	R/W	00h	30.3.6/481
4006_7006	I2C Programmable Input Glitch Filter register (I2C1_FLT)	8	R/W	00h	30.3.7/482
4006_7007	I2C Range Address register (I2C1_RA)	8	R/W	00h	30.3.8/484

30.3.1 I2C Address Register 1 (I2Cx_A1)

This register contains the slave address to be used by the I2C module.

Address: Base address + 0h offset

Bit	7	6	5	4	3	2	1	0
Read Write	AD[7:1]							0
Reset	0	0	0	0	0	0	0	0

I2Cx_A1 field descriptions

Field	Description
7–1 AD[7:1]	Address Contains the primary slave address used by the I2C module when it is addressed as a slave. This field is used in the 7-bit address scheme and the lower seven bits in the 10-bit address scheme.
0 Reserved	This field is reserved. This read-only field is reserved and always has the value 0.

30.3.2 I2C Frequency Divider register (I2Cx_F)

Address: Base address + 1h offset

Bit	7	6	5	4	3	2	1	0
Read Write	MULT		ICR					
Reset	0	0	0	0	0	0	0	0

I2Cx_F field descriptions

Field	Description
7–6 MULT	The MULT bits define the multiplier factor mul. This factor is used along with the SCL divider to generate the I2C baud rate. 00 mul = 1 01 mul = 2 10 mul = 4 11 Reserved

ICR	ClockRate
	
	Prescales the bus clock for bit rate selection. This field and the MULT field determine the I2C baud rate, the SDA hold time, the SCL start hold time, and the SCL stop hold time. For a list of values corresponding to each ICR setting, see I2C divider and hold values.
	
	The SCL divider multiplied by multiplier factor (mul) determines the I2C baud rate.
	
	`I2C baud rate = bus speed (Hz)/(mul × SCL divider)`
	
	The SDA hold time is the delay from the falling edge of SCL (I2C clock) to the changing of SDA (I2C data).
	
	`SDA hold time = bus period (s) × mul × SDA hold value`
	
	The SCL start hold time is the delay from the falling edge of SDA (I2C data) while SCL is high (start condition) to the falling edge of SCL (I2C clock).
	
	`SCL start hold time = bus period (s) × mul × SCL start hold value`
	
	The SCL stop hold time is the delay from the rising edge of SCL (I2C clock) to the rising edge of SDA (I2C data) while SCL is high (stop condition).
	
	`SCL stop hold time = bus period (s) × mul × SCL stop hold value`
	
	For example, if the bus speed is 8 MHz, the following table shows the possible hold time values with different ICR and MULT selections to achieve an I^2C baud rate of 100 kbit/s.

MULT	ICR	Hold times (µs)		
		SDA	SCL Start	SCL Stop
2h	00h	3.500	3.000	5.500
1h	07h	2.500	4.000	5.250
1h	0Bh	2.250	4.000	5.250
0h	14h	2.125	4.250	5.125
0h	18h	1.125	4.750	5.125

30.3.3 I2C Control Register 1 (I2Cx_C1)

Address: Base address + 2h offset

Bit	7	6	5	4	3	2	1	0
Read	IICEN	IICIE	MST	TX	TXAK	0	WUEN	0
Write						RSTA		
Reset	0	0	0	0	0	0	0	0

I2Cx_C1 field descriptions

Field	Description
7 IICEN	I2C Enable Enables I2C module operation. 0 Disabled 1 Enabled
6 IICIE	I2C Interrupt Enable Enables I2C interrupt requests. 0 Disabled 1 Enabled
5 MST	Master Mode Select When the MST bit is changed from a 0 to a 1, a START signal is generated on the bus and master mode is selected. When this bit changes from a 1 to a 0, a STOP signal is generated and the mode of operation changes from master to slave. 0 Slave mode 1 Master mode
4 TX	Transmit Mode Select Selects the direction of master and slave transfers. In master mode this bit must be set according to the type of transfer required. Therefore, for address cycles, this bit is always set. When addressed as a slave this bit must be set by software according to the SRW bit in the status register. 0 Receive 1 Transmit
3 TXAK	Transmit Acknowledge Enable Specifies the value driven onto the SDA during data acknowledge cycles for both master and slave receivers. **NOTE:** SCL is held low until TXAK is written. 0 An acknowledge signal is sent to the bus on the following receiving byte 1 No acknowledge signal is sent to the bus on the following receiving data byte.
2 RSTA	Repeat START Writing a one to this bit generates a repeated START condition provided it is the current master. This bit will always be read as zero. Attempting a repeat at the wrong time results in loss of arbitration.

Table continues on the next page...

I2Cx_C1 field descriptions (continued)

Field	Description
1 WUEN	Wakeup Enable The I2C module can wake the MCU from low power mode with no peripheral bus running when slave address matching occurs. 0 Normal operation. No interrupt generated when address matching in low power mode. 1 Enables the wakeup function in low power mode.
0 Reserved	This field is reserved. This read-only field is reserved and always has the value 0.

30.3.4 I2C Status register (I2Cx_S)

Address: Base address + 3h offset

Bit	7	6	5	4	3	2	1	0
Read	TCF	IAAS	BUSY	ARBL	RAM	SRW	IICIF	RXAK
Write				w1c			w1c	
Reset	1	0	0	0	0	0	0	0

I2Cx_S field descriptions

Field	Description
7 TCF	Transfer Complete Flag This bit sets on the completion of a byte and acknowledge bit transfer. This bit is valid only during or immediately following a transfer to or from the I2C module. The TCF bit is cleared by reading the I2C data register in receive mode or by writing to the I2C data register in transmit mode. 0 Transfer in progress 1 Transfer complete
6 IAAS	Addressed As A Slave This bit is set by one of the following conditions: • The calling address matches the programmed slave primary address in the A1 register or range address in the RA register (which must be set to a nonzero value). • GCAEN is set and a general call is received. • RMEN is set and an address is received that is within the range between the values of the A1 and RA registers. This bit sets before the ACK bit. The CPU must check the SRW bit and set TX/RX accordingly. Writing the C1 register with any value clears this bit. 0 Not addressed 1 Addressed as a slave
5 BUSY	Bus Busy Indicates the status of the bus regardless of slave or master mode. This bit is set when a START signal is detected and cleared when a STOP signal is detected.

Table continues on the next page...

I2Cx_S field descriptions (continued)

Field	Description
	0 Bus is idle 1 Bus is busy
4 ARBL	Arbitration Lost This bit is set by hardware when the arbitration procedure is lost. The ARBL bit must be cleared by software, by writing a one to it. 0 Standard bus operation. 1 Loss of arbitration.
3 RAM	Range Address Match This bit is set to 1 by any of the following conditions: • Any nonzero calling address is received that matches the address in the RA register. • The RMEN bit is set and the calling address is within the range of values of the A1 and RA registers. **NOTE:** For the RAM bit to be set to 1 correctly, C1[IICIE] must be set to 1. Writing the C1 register with any value clears this bit to 0. 0 Not addressed 1 Addressed as a slave
2 SRW	Slave Read/Write When addressed as a slave, SRW indicates the value of the R/$\overline{W}$ command bit of the calling address sent to the master. 0 Slave receive, master writing to slave 1 Slave transmit, master reading from slave
1 IICIF	Interrupt Flag This bit sets when an interrupt is pending. This bit must be cleared by software by writing a 1 to it, such as in the interrupt routine. One of the following events can set this bit: • One byte transfer, including ACK/NACK bit, completes. An ACK or NACK is sent on the bus by writing 0 or 1 to TXAK after this bit is set in receive mode. • Match of slave address to calling address including primary slave address, range slave address or general call address. • Arbitration lost • I2C bus stop detection if the STOPIE bit in the Input Glitch Filter register is 1 **NOTE:** To clear the I2C bus stop detection interrupt: In the interrupt service routine, first clear the STOPF bit in the Input Glitch Filter register by writing 1 to it, and then clear the IICIF bit. If this sequence is reversed, the IICIF bit is asserted again. 0 No interrupt pending 1 Interrupt pending
0 RXAK	Receive Acknowledge 0 Acknowledge signal was received after the completion of one byte of data transmission on the bus 1 No acknowledge signal detected

30.3.5 I2C Data I/O register (I2Cx_D)

Address: Base address + 4h offset

Bit	7	6	5	4	3	2	1	0
Read Write	DATA							
Reset	0	0	0	0	0	0	0	0

I2Cx_D field descriptions

Field	Description
DATA	Data In master transmit mode, when data is written to this register, a data transfer is initiated. The most significant bit is sent first. In master receive mode, reading this register initiates receiving of the next byte of data. **NOTE:** When making the transition out of master receive mode, switch the I2C mode before reading the Data register to prevent an inadvertent initiation of a master receive data transfer. In slave mode, the same functions are available after an address match occurs. The C1[TX] bit must correctly reflect the desired direction of transfer in master and slave modes for the transmission to begin. For example, if the I2C module is configured for master transmit but a master receive is desired, reading the Data register does not initiate the receive. Reading the Data register returns the last byte received while the I2C module is configured in master receive or slave receive mode. The Data register does not reflect every byte that is transmitted on the I2C bus, and neither can software verify that a byte has been written to the Data register correctly by reading it back. In master transmit mode, the first byte of data written to the Data register following assertion of MST (start bit) or assertion of RSTA (repeated start bit) is used for the address transfer and must consist of the calling address (in bits 7-1) concatenated with the required R/$\overline{W}$ bit (in position bit 0).

30.3.6 I2C Control Register 2 (I2Cx_C2)

Address: Base address + 5h offset

Bit	7	6	5	4	3	2	1	0
Read Write	GCAEN	ADEXT	HDRS	SBRC	RMEN	AD[10:8]		
Reset	0	0	0	0	0	0	0	0

I2Cx_C2 field descriptions

Field	Description
7 GCAEN	General Call Address Enable Enables general call address. 0 Disabled 1 Enabled

Table continues on the next page...

I2Cx_C2 field descriptions (continued)

Field	Description
6 ADEXT	Address Extension Controls the number of bits used for the slave address. 0 7-bit address scheme 1 10-bit address scheme
5 HDRS	High Drive Select Controls the drive capability of the I2C pads. 0 Normal drive mode 1 High drive mode
4 SBRC	Slave Baud Rate Control Enables independent slave mode baud rate at maximum frequency, which forces clock stretching on SCL in very fast I2C modes. To a slave, an example of a "very fast" mode is when the master transfers at 40 kbit/s but the slave can capture the master's data at only 10 kbit/s. 0 The slave baud rate follows the master baud rate and clock stretching may occur 1 Slave baud rate is independent of the master baud rate
3 RMEN	Range Address Matching Enable This bit controls slave address matching for addresses between the values of the A1 and RA registers. When this bit is set, a slave address match occurs for any address greater than the value of the A1 register and less than or equal to the value of the RA register. 0 Range mode disabled. No address match occurs for an address within the range of values of the A1 and RA registers. 1 Range mode enabled. Address matching occurs when a slave receives an address within the range of values of the A1 and RA registers.
AD[10:8]	Slave Address Contains the upper three bits of the slave address in the 10-bit address scheme. This field is valid only while the ADEXT bit is set.

30.3.7 I2C Programmable Input Glitch Filter register (I2Cx_FLT)

Address: Base address + 6h offset

Bit	7	6	5	4	3	2	1	0
Read	SHEN	STOPF	STOPIE	FLT				
Write		w1c						
Reset	0	0	0	0	0	0	0	0

I2Cx_FLT field descriptions

Field	Description
7 SHEN	Stop Hold Enable Set this bit to hold off entry to stop mode when any data transmission or reception is occurring.

Table continues on the next page...

I2Cx_FLT field descriptions (continued)

Field	Description
	The following scenario explains the holdoff functionality: 1. The I2C module is configured for a basic transfer, and the SHEN bit is set to 1. 2. A transfer begins. 3. The MCU signals the I2C module to enter stop mode. 4. The byte currently being transferred, including both address and data, completes its transfer. 5. The I2C slave or master acknowledges that the in-transfer byte completed its transfer and acknowledges the request to enter stop mode. 6. After receiving the I2C module's acknowledgment of the request to enter stop mode, the MCU determines whether to shut off the I2C module's clock. If the SHEN bit is set to 1 and the I2C module is in an idle or disabled state when the MCU signals to enter stop mode, the module immediately acknowledges the request to enter stop mode. If SHEN is cleared to 0 and the overall data transmission or reception that was suspended by stop mode entry was incomplete: To resume the overall transmission or reception after the MCU exits stop mode, software must reinitialize the transfer by resending the address of the slave. If the I2C Control Register 1's IICIE bit was set to 1 before the MCU entered stop mode, system software will receive the interrupt triggered by the I2C Status Register's TCF bit after the MCU wakes from the stop mode. 0 Stop holdoff is disabled. The MCU's entry to stop mode is not gated. 1 Stop holdoff is enabled.
6 STOPF	I2C Bus Stop Detect Flag Hardware sets this bit when the I2C bus's stop status is detected. The STOPF bit must be cleared by writing 1 to it. 0 No stop happens on I2C bus 1 Stop detected on I2C bus
5 STOPIE	I2C Bus Stop Interrupt Enable This bit enables the interrupt for I2C bus stop detection. **NOTE:** To clear the I2C bus stop detection interrupt: In the interrupt service routine, first clear the STOPF bit by writing 1 to it, and then clear the IICIF bit in the status register. If this sequence is reversed, the IICIF bit is asserted again. 0 Stop detection interrupt is disabled 1 Stop detection interrupt is enabled
FLT	I2C Programmable Filter Factor Controls the width of the glitch, in terms of bus clock cycles, that the filter must absorb. For any glitch whose size is less than or equal to this width setting, the filter does not allow the glitch to pass. 00h No filter/bypass 01-1Fh Filter glitches up to width of *n* bus clock cycles, where *n*=1-31d

30.3.8 I2C Range Address register (I2Cx_RA)

Address: Base address + 7h offset

Bit	7	6	5	4	3	2	1	0
Read Write	RAD							0
Reset	0	0	0	0	0	0	0	0

I2Cx_RA field descriptions

Field	Description
7–1 RAD	Range Slave Address This field contains the slave address to be used by the I2C module. The field is used in the 7-bit address scheme. Any nonzero write enables this register. This register's use is similar to that of the A1 register, but in addition this register can be considered a maximum boundary in range matching mode.
0 Reserved	This field is reserved. This read-only field is reserved and always has the value 0.

30.4 Functional description

This section provides a comprehensive functional description of the I2C module.

30.4.1 I2C protocol

The I2C bus system uses a serial data line (SDA) and a serial clock line (SCL) for data transfers. All devices connected to it must have open drain or open collector outputs. A logic AND function is exercised on both lines with external pull-up resistors. The value of these resistors depends on the system.

Normally, a standard instance of communication is composed of four parts:

1. START signal
2. Slave address transmission
3. Data transfer
4. STOP signal

The STOP signal should not be confused with the CPU STOP instruction. The following figure illustrates I2C bus system communication.

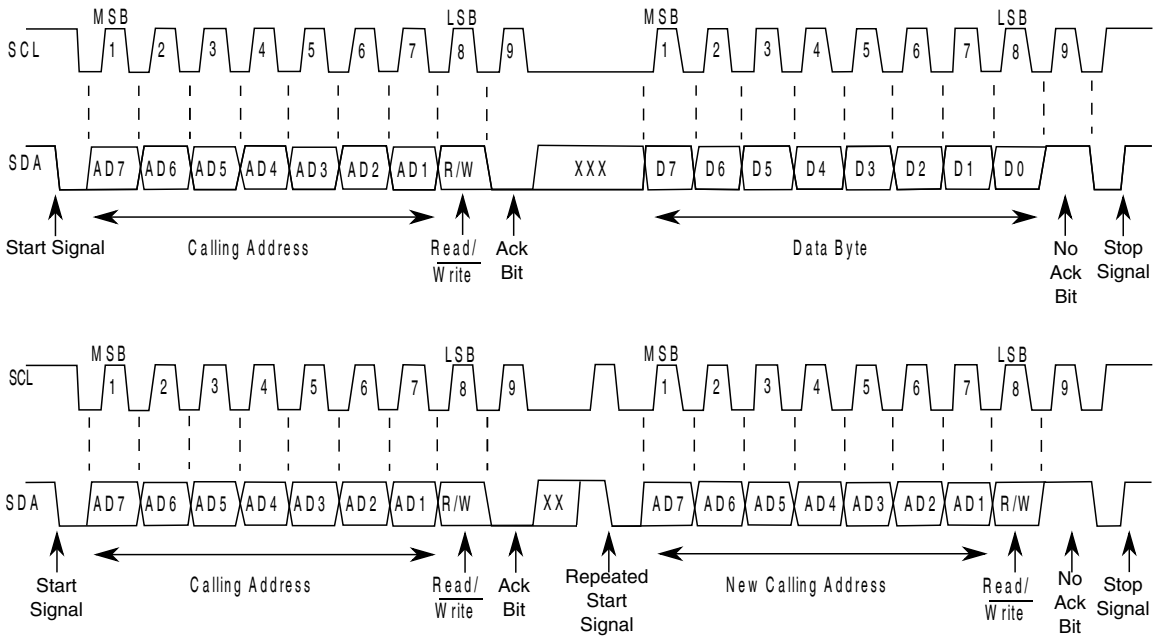

Figure 30-26. I2C bus transmission signals

30.4.1.1 START signal

The bus is free when no master device is engaging the bus (both SCL and SDA are high). When the bus is free, a master may initiate communication by sending a START signal. A START signal is defined as a high-to-low transition of SDA while SCL is high. This signal denotes the beginning of a new data transfer—each data transfer might contain several bytes of data—and brings all slaves out of their idle states.

30.4.1.2 Slave address transmission

Immediately after the START signal, the first byte of a data transfer is the slave address transmitted by the master. This address is a 7-bit calling address followed by an R/$\overline{W}$ bit. The R/$\overline{W}$ bit tells the slave the desired direction of data transfer.

- 1 = Read transfer: The slave transmits data to the master
- 0 = Write transfer: The master transmits data to the slave

Only the slave with a calling address that matches the one transmitted by the master responds by sending an acknowledge bit. The slave sends the acknowledge bit by pulling SDA low at the ninth clock.

No two slaves in the system can have the same address. If the I2C module is the master, it must not transmit an address that is equal to its own slave address. The I2C module cannot be master and slave at the same time. However, if arbitration is lost during an address cycle, the I2C module reverts to slave mode and operates correctly even if it is being addressed by another master.

30.4.1.3 Data transfers

When successful slave addressing is achieved, data transfer can proceed on a byte-by-byte basis in the direction specified by the R/$\overline{W}$ bit sent by the calling master.

All transfers that follow an address cycle are referred to as data transfers, even if they carry subaddress information for the slave device.

Each data byte is 8 bits long. Data may be changed only while SCL is low. Data must be held stable while SCL is high. There is one clock pulse on SCL for each data bit, and the MSB is transferred first. Each data byte is followed by a ninth (acknowledge) bit, which is signaled from the receiving device by pulling SDA low at the ninth clock. In summary, one complete data transfer needs nine clock pulses.

If the slave receiver does not acknowledge the master in the ninth bit, the slave must leave SDA high. The master interprets the failed acknowledgement as an unsuccessful data transfer.

If the master receiver does not acknowledge the slave transmitter after a data byte transmission, the slave interprets it as an end to data transfer and releases the SDA line.

In the case of a failed acknowledgement by either the slave or master, the data transfer is aborted and the master does one of two things:

- Relinquishes the bus by generating a STOP signal.
- Commences a new call by generating a repeated START signal.

30.4.1.4 STOP signal

The master can terminate the communication by generating a STOP signal to free the bus. A STOP signal is defined as a low-to-high transition of SDA while SCL is asserted.

The master can generate a STOP signal even if the slave has generated an acknowledgement, at which point the slave must release the bus.

30.4.1.5 Repeated START signal

The master may generate a START signal followed by a calling command without generating a STOP signal first. This action is called a repeated START. The master uses a repeated START to communicate with another slave or with the same slave in a different mode (transmit/receive mode) without releasing the bus.

30.4.1.6 Arbitration procedure

The I2C bus is a true multimaster bus that allows more than one master to be connected on it.

If two or more masters try to control the bus at the same time, a clock synchronization procedure determines the bus clock. The bus clock's low period is equal to the longest clock low period, and the high period is equal to the shortest one among the masters.

The relative priority of the contending masters is determined by a data arbitration procedure. A bus master loses arbitration if it transmits logic level 1 while another master transmits logic level 0. The losing masters immediately switch to slave receive mode and stop driving SDA output. In this case, the transition from master to slave mode does not generate a STOP condition. Meanwhile, hardware sets a status bit to indicate the loss of arbitration.

30.4.1.7 Clock synchronization

Because wire AND logic is performed on SCL, a high-to-low transition on SCL affects all devices connected on the bus. The devices start counting their low period and, after a device's clock has gone low, that device holds SCL low until the clock reaches its high state. However, the change of low to high in this device clock might not change the state of SCL if another device clock is still within its low period. Therefore, the synchronized clock SCL is held low by the device with the longest low period. Devices with shorter low periods enter a high wait state during this time; see the following diagram. When all applicable devices have counted off their low period, the synchronized clock SCL is released and pulled high. Afterward there is no difference between the device clocks and the state of SCL, and all devices start counting their high periods. The first device to complete its high period pulls SCL low again.

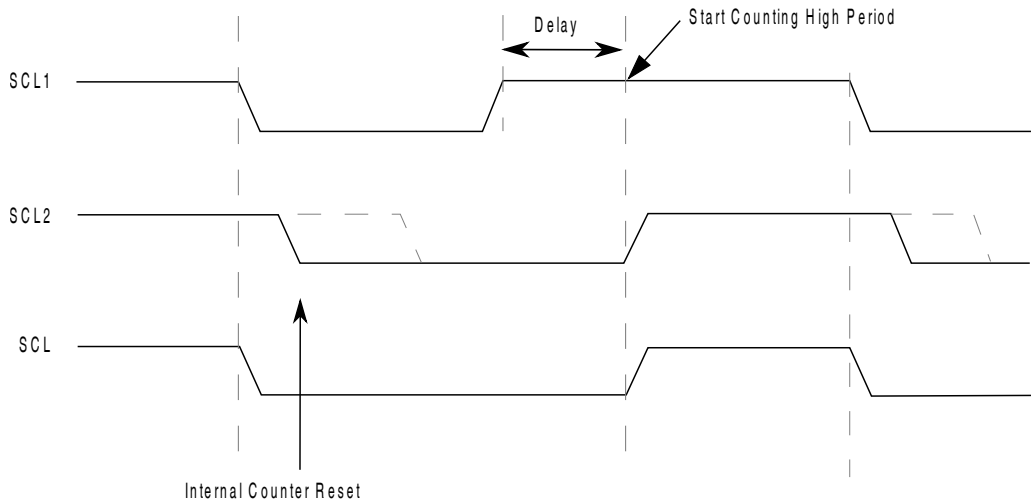

Figure 30-27. I2C clock synchronization

30.4.1.8 Handshaking

The clock synchronization mechanism can be used as a handshake in data transfers. A slave device may hold SCL low after completing a single byte transfer (9 bits). In this case, it halts the bus clock and forces the master clock into wait states until the slave releases SCL.

30.4.1.9 Clock stretching

The clock synchronization mechanism can be used by slaves to slow down the bit rate of a transfer. After the master drives SCL low, a slave can drive SCL low for the required period and then release it. If the slave's SCL low period is greater than the master's SCL low period, the resulting SCL bus signal's low period is stretched. In other words, the SCL bus signal's low period is increased to be the same length as the slave's SCL low period.

30.4.1.10 I2C divider and hold values

NOTE

For some cases on some devices, the SCL divider value may vary by +/-2 or +/-4 when ICR’s value ranges from 00h to 0Fh. These potentially varying SCL divider values are highlighted in the following table. For the actual SCL divider values for your device, see the chip-specific details about the I2C module.

Table 30-29. I2C divider and hold values

ICR (hex)	SCL divider	SDA hold value	SCL hold (start) value	SCL hold (stop) value	ICR (hex)	SCL divider (clocks)	SDA hold (clocks)	SCL hold (start) value	SCL hold (stop) value
00	20	7	6	11	20	160	17	78	81
01	22	7	7	12	21	192	17	94	97
02	24	8	8	13	22	224	33	110	113
03	26	8	9	14	23	256	33	126	129
04	28	9	10	15	24	288	49	142	145
05	30	9	11	16	25	320	49	158	161
06	34	10	13	18	26	384	65	190	193
07	40	10	16	21	27	480	65	238	241
08	28	7	10	15	28	320	33	158	161
09	32	7	12	17	29	384	33	190	193
0A	36	9	14	19	2A	448	65	222	225
0B	40	9	16	21	2B	512	65	254	257
0C	44	11	18	23	2C	576	97	286	289
0D	48	11	20	25	2D	640	97	318	321
0E	56	13	24	29	2E	768	129	382	385
0F	68	13	30	35	2F	960	129	478	481
10	48	9	18	25	30	640	65	318	321
11	56	9	22	29	31	768	65	382	385
12	64	13	26	33	32	896	129	446	449
13	72	13	30	37	33	1024	129	510	513
14	80	17	34	41	34	1152	193	574	577
15	88	17	38	45	35	1280	193	638	641
16	104	21	46	53	36	1536	257	766	769
17	128	21	58	65	37	1920	257	958	961
18	80	9	38	41	38	1280	129	638	641
19	96	9	46	49	39	1536	129	766	769
1A	112	17	54	57	3A	1792	257	894	897
1B	128	17	62	65	3B	2048	257	1022	1025
1C	144	25	70	73	3C	2304	385	1150	1153
1D	160	25	78	81	3D	2560	385	1278	1281
1E	192	33	94	97	3E	3072	513	1534	1537
1F	240	33	118	121	3F	3840	513	1918	1921

30.4.2 10-bit address

For 10-bit addressing, 0x11110 is used for the first 5 bits of the first address byte. Various combinations of read/write formats are possible within a transfer that includes 10-bit addressing.

30.4.2.1 Master-transmitter addresses a slave-receiver

The transfer direction is not changed. When a 10-bit address follows a START condition, each slave compares the first 7 bits of the first byte of the slave address (11110XX) with its own address and tests whether the eighth bit (R/$\overline{W}$ direction bit) is 0. It is possible that more than one device finds a match and generates an acknowledge (A1). Each slave that finds a match compares the 8 bits of the second byte of the slave address with its own address, but only one slave finds a match and generates an acknowledge (A2). The matching slave remains addressed by the master until it receives a STOP condition (P) or a repeated START condition (Sr) followed by a different slave address.

Table 30-30. Master-transmitter addresses slave-receiver with a 10-bit address

S	Slave address first 7 bits 11110 + AD10 + AD9	R/$\overline{W}$ 0	A1	Slave address second byte AD[8:1]	A2	Data	A	...	Data	A/A	P

After the master-transmitter has sent the first byte of the 10-bit address, the slave-receiver sees an I2C interrupt. User software must ensure that for this interrupt, the contents of the Data register are ignored and not treated as valid data.

30.4.2.2 Master-receiver addresses a slave-transmitter

The transfer direction is changed after the second R/$\overline{W}$ bit. Up to and including acknowledge bit A2, the procedure is the same as that described for a master-transmitter addressing a slave-receiver. After the repeated START condition (Sr), a matching slave remembers that it was addressed before. This slave then checks whether the first seven bits of the first byte of the slave address following Sr are the same as they were after the START condition (S), and it tests whether the eighth (R/$\overline{W}$) bit is 1. If there is a match, the slave considers that it has been addressed as a transmitter and generates acknowledge A3. The slave-transmitter remains addressed until it receives a STOP condition (P) or a repeated START condition (Sr) followed by a different slave address.

After a repeated START condition (Sr), all other slave devices also compare the first seven bits of the first byte of the slave address with their own addresses and test the eighth (R/$\overline{W}$) bit. However, none of them are addressed because R/$\overline{W}$ = 1 (for 10-bit devices), or the 11110XX slave address (for 7-bit devices) does not match.

Table 30-31. Master-receiver addresses a slave-transmitter with a 10-bit address

S	Slave address first 7 bits 11110 + AD10 + AD9	R/$\overline{W}$ 0	A1	Slave address second byte AD[8:1]	A2	Sr	Slave address first 7 bits 11110 + AD10 + AD9	R/$\overline{W}$ 1	A3	Data	A	...	Data	A	P

After the master-receiver has sent the first byte of the 10-bit address, the slave-transmitter sees an I2C interrupt. User software must ensure that for this interrupt, the contents of the Data register are ignored and not treated as valid data.

30.4.3 Address matching

All received addresses can be requested in 7-bit or 10-bit address format.

- AD[7:1] in Address Register 1, which contains the I2C primary slave address, always participates in the address matching process. It provides a 7-bit address.
- If the ADEXT bit is set, AD[10:8] in Control Register 2 participates in the address matching process. It extends the I2C primary slave address to a 10-bit address.

Additional conditions that affect address matching include:

- If the GCAEN bit is set, general call participates the address matching process.
- If the Range Address register is programmed to a nonzero value, the range address itself participates in the address matching process.
- If the RMEN bit is set, any address within the range of values of Address Register 1 and the Range Address register participates in the address matching process. The Range Address register must be programmed to a value greater than the value of Address Register 1.

When the I2C module responds to one of these addresses, it acts as a slave-receiver and the IAAS bit is set after the address cycle. Software must read the Data register after the first byte transfer to determine that the address is matched.

30.4.4 Resets

The I2C module is disabled after a reset. The I2C module cannot cause a core reset.

30.4.5 Interrupts

The I2C module generates an interrupt when any of the events in the following table occur, provided that the IICIE bit is set. The interrupt is driven by the IICIF bit (of the I2C Status Register) and masked with the IICIE bit (of the I2C Control Register 1). The IICIF bit must be cleared (by software) by writing 1 to it in the interrupt routine. You can determine the interrupt type by reading the Status Register.

Table 30-32. Interrupt summary

Interrupt source	Status	Flag	Local enable
Complete 1-byte transfer	TCF	IICIF	IICIE
Match of received calling address	IAAS	IICIF	IICIE
Arbitration lost	ARBL	IICIF	IICIE
I^2C bus stop detection	STOPF	IICIF	IICIE & STOPIE
Wakeup from stop or wait mode	IAAS	IICIF	IICIE & WUEN

30.4.5.1 Byte transfer interrupt

The Transfer Complete Flag (TCF) bit is set at the falling edge of the ninth clock to indicate the completion of a byte and acknowledgement transfer.

30.4.5.2 Address detect interrupt

When the calling address matches the programmed slave address (I2C Address Register) or when the GCAEN bit is set and a general call is received, the IAAS bit in the Status Register is set. The CPU is interrupted, provided the IICIE bit is set. The CPU must check the SRW bit and set its Tx mode accordingly.

30.4.5.3 Stop Detect Interrupt

When the stop status is detected on the I^2C bus, the STOPF bit is set to 1. The CPU is interrupted, provided the IICIE and STOPIE bits are both set to 1.

30.4.5.4 Exit from low-power/stop modes

The slave receive input detect circuit and address matching feature are still active on low power modes (wait and stop). An asynchronous input matching slave address or general call address brings the CPU out of low power/stop mode if the interrupt is not masked. Therefore, TCF and IAAS both can trigger this interrupt.

30.4.5.5 Arbitration lost interrupt

The I2C is a true multimaster bus that allows more than one master to be connected on it. If two or more masters try to control the bus at the same time, the relative priority of the contending masters is determined by a data arbitration procedure. The I2C module asserts the arbitration-lost interrupt when it loses the data arbitration process and the ARBL bit in the Status Register is set.

Arbitration is lost in the following circumstances:

1. SDA is sampled as low when the master drives high during an address or data transmit cycle.
2. SDA is sampled as low when the master drives high during the acknowledge bit of a data receive cycle.
3. A START cycle is attempted when the bus is busy.
4. A repeated START cycle is requested in slave mode.
5. A STOP condition is detected when the master did not request it.

The ARBL bit must be cleared (by software) by writing 1 to it.

30.4.6 Programmable input glitch filter

An I2C glitch filter has been added outside legacy I2C modules but within the I2C package. This filter can absorb glitches on the I2C clock and data lines for the I2C module. The width of the glitch to absorb can be specified in terms of the number of (half) bus clock cycles. A single Programmable Input Glitch Filter control register is provided. Effectively, any down-up-down or up-down-up transition on the data line that occurs within the number of clock cycles programmed in this register is ignored by the I2C module. The programmer must specify the size of the glitch (in terms of bus clock cycles) for the filter to absorb and not pass.

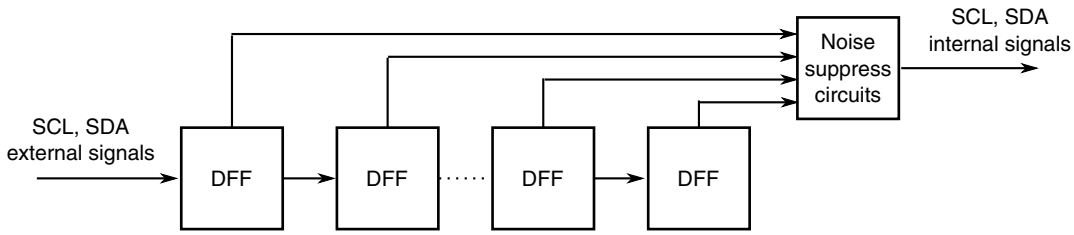

Figure 30-28. Programmable input glitch filter diagram

30.4.7 Address matching wakeup

When a primary, range, or general call address match occurs when the I2C module is in slave receive mode, the MCU wakes from a low power mode where no peripheral bus is running. Data sent on the bus that is the same as a target device address might also wake the target MCU.

After the address matching IAAS bit is set, an interrupt is sent at the end of address matching to wake the core. The IAAS bit must be cleared after the clock recovery.

NOTE

After the system recovers and is in Run mode, restart the I2C module if it is needed to transfer packets. The SCL line is not held low until the I2C module resets after address matching. The main purpose of this feature is to wake the MCU from a low power mode where no peripheral bus is running. When the MCU is in such a mode: addressing as a slave, slave read/write, and sending an acknowledge bit are not fully supported. To avoid I2C transfer problems resulting from this situation, firmware should prevent the MCU execution of a STOP instruction when the I2C module is in the middle of a transfer unless the Stop mode holdoff feature is used during this period (set FLT[SHEN] to 1).

30.5 Initialization/application information

Module Initialization (Slave)

1. Write: Control Register 2
   - to enable or disable general call
   - to select 10-bit or 7-bit addressing mode

2. Write: Address Register 1 to set the slave address
3. Write: Control Register 1 to enable the I2C module and interrupts
4. Initialize RAM variables (IICEN = 1 and IICIE = 1) for transmit data
5. Initialize RAM variables used to achieve the routine shown in the following figure

Module Initialization (Master)

1. Write: Frequency Divider register to set the I2C baud rate (see example in description of ICR)
2. Write: Control Register 1 to enable the I2C module and interrupts
3. Initialize RAM variables (IICEN = 1 and IICIE = 1) for transmit data
4. Initialize RAM variables used to achieve the routine shown in the following figure
5. Write: Control Register 1 to enable TX
6. Write: Control Register 1 to enable MST (master mode)
7. Write: Data register with the address of the target slave (the LSB of this byte determines whether the communication is master receive or transmit)

The routine shown in the following figure encompasses both master and slave I2C operations. For slave operation, an incoming I2C message that contains the proper address begins I2C communication. For master operation, communication must be initiated by writing the Data register.

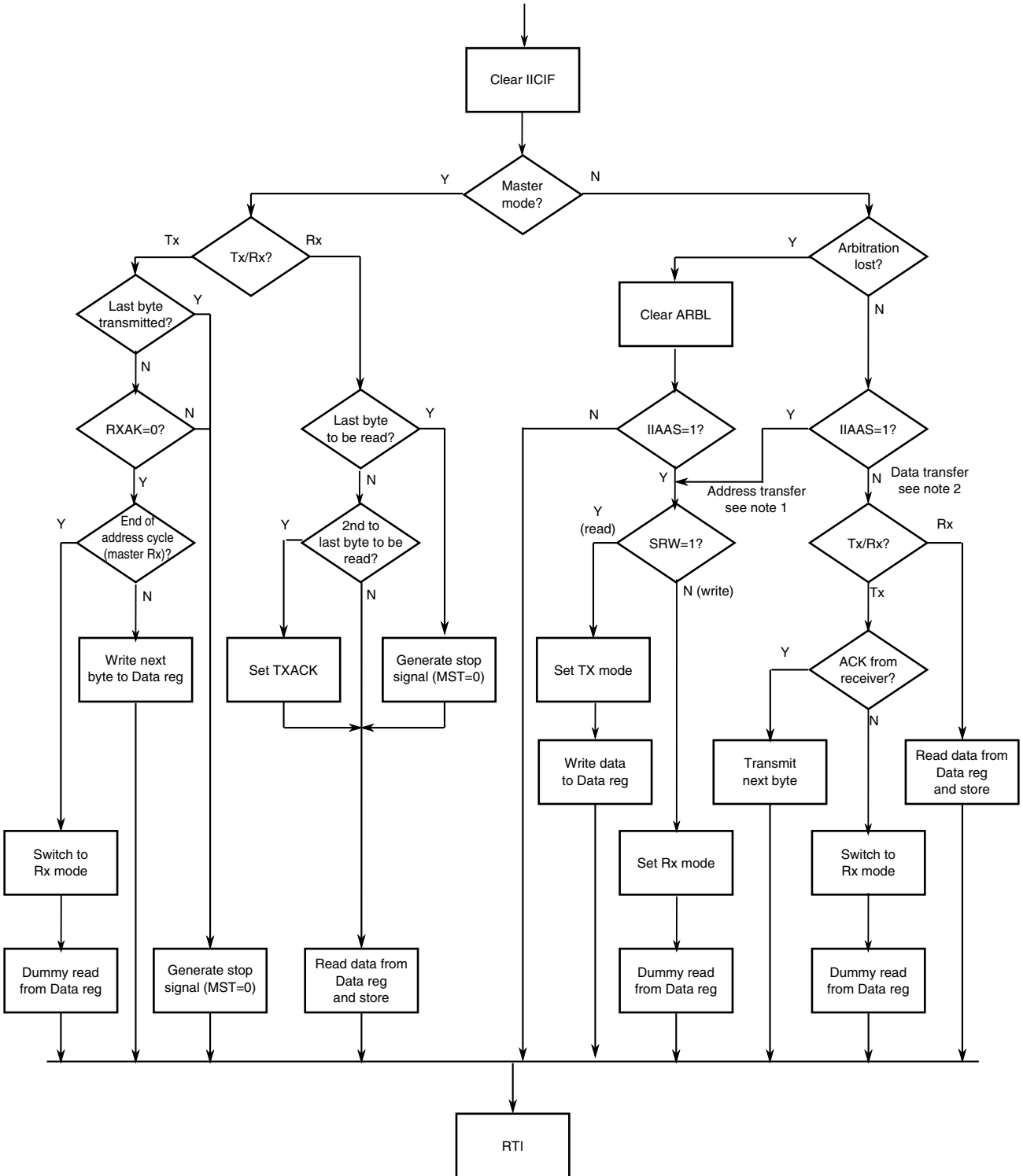

Notes:

1. If general call is enabled, check to determine if the received address is a general call address (0x00). If the received address is a general call address, the general call must be handled by user software.
2. When 10-bit addressing addresses a slave, the slave sees an interrupt following the first byte of the extended address. Ensure that for this interrupt, the contents of the Data register are ignored and not treated as a valid data transfer.

Figure 30-29. Typical I2C interrupt routine

Chapter 31
Universal Asynchronous Receiver/Transmitter (UART0)

31.1 Introduction

31.1.1 Features

Features of the UART module include:

- Full-duplex, standard non-return-to-zero (NRZ) format
- Double-buffered transmitter and receiver with separate enables
- Programmable baud rates (13-bit modulo divider)
- Transmit and receive baud rate can operate asynchronous to the bus clock:
    - Baud rate can be configured independently of the bus clock frequency
    - Supports operation in Stop modes
- Configurable receiver buad rate oversampling ratio from 4x to 32x
- Interrupt or polled operation:
    - Transmit data register empty and transmission complete
    - Receive data register full
    - Receive overrun, parity error, framing error, and noise error
    - Idle receiver detect
    - Active edge on receive pin
    - Break detect supporting LIN
- Hardware parity generation and checking
- Programmable 8-bit, 9-bit or 10-bit character length
- Programmable 1-bit or 2-bit stop bits
- Receiver wakeup by idle-line, address-mark or address match
- Optional 13-bit break character generation / 11-bit break character detection
- Selectable transmitter output and receiver input polarity

31.1.2 Modes of operation

31.1.2.1 Stop mode

The UART will remain functional during Stop mode, provided the asynchronous transmit and receive clock remains enabled. The UART can generate an interrupt to cause a wakeup from Stop mode.

31.1.2.2 Wait mode

The UART can be configured to Stop in Wait modes, when the DOZEEN bit is set. The transmitter and receiver will finish transmitting/receiving the current word.

31.1.2.3 Debug mode

The UART remains functional in debug mode.

31.1.3 Block diagram

The following figure shows the transmitter portion of the UART.

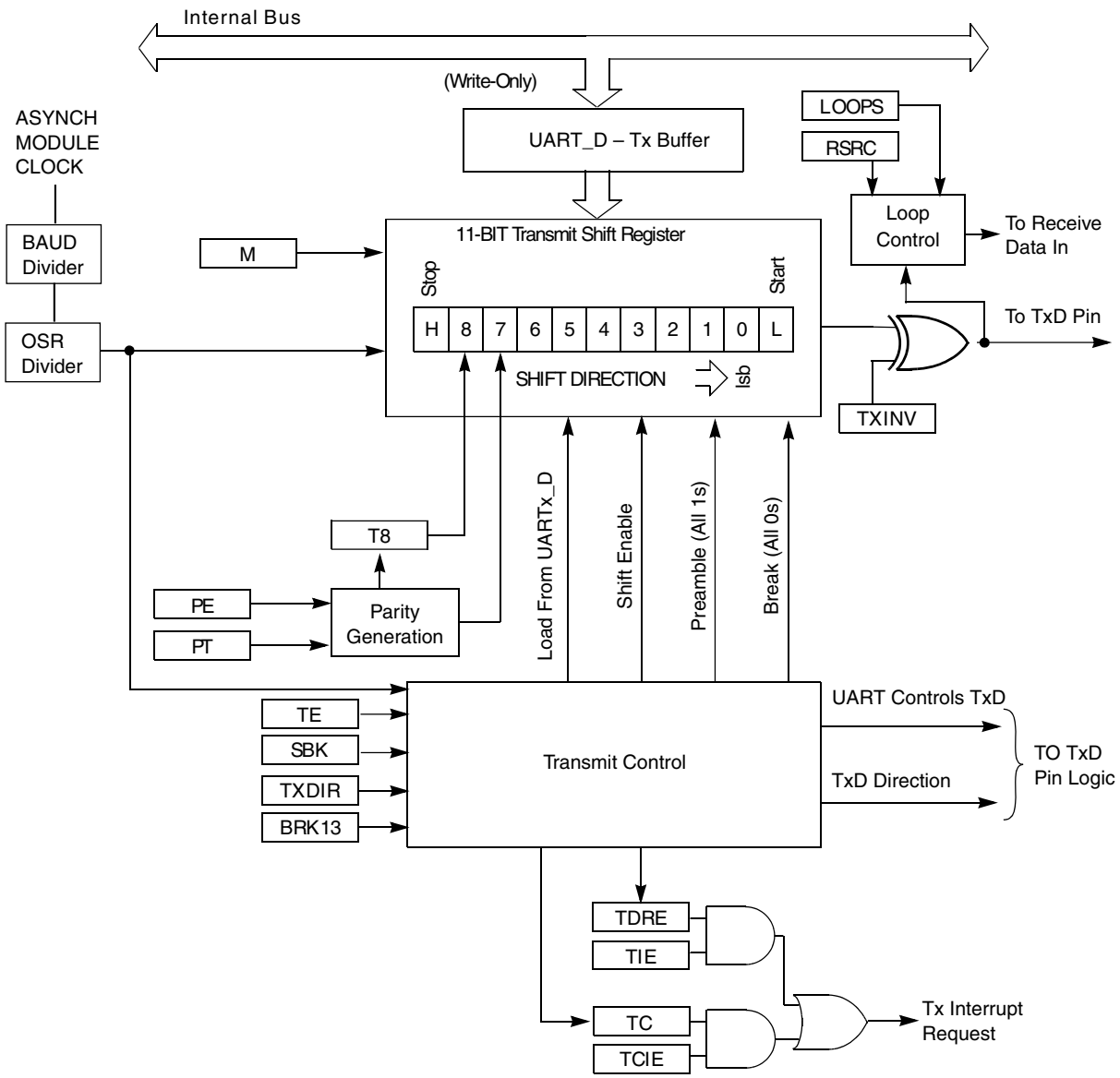

Figure 31-1. UART transmitter block diagram

The following figure shows the receiver portion of the UART.

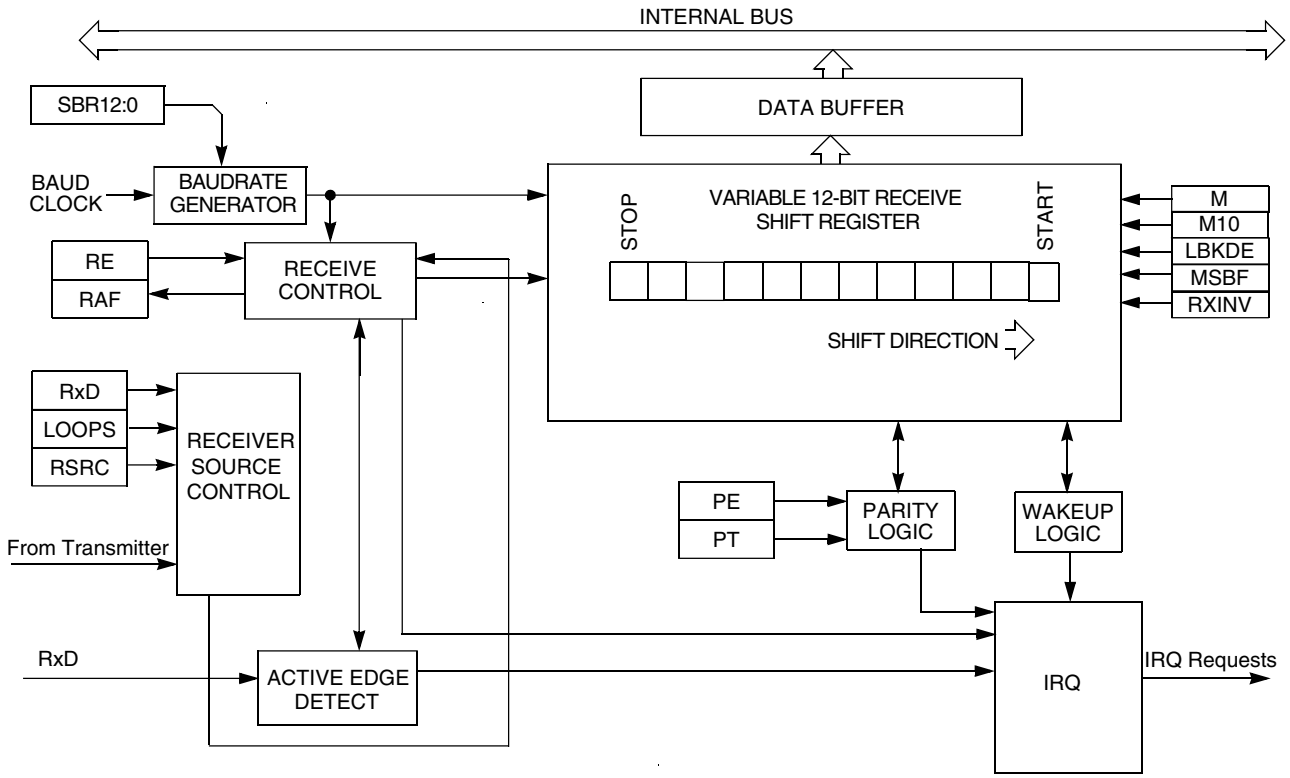

Figure 31-2. UART receiver block diagram

31.2 Register definition

The UART includes registers to control baud rate, select UART options, report UART status, and for transmit/receive data. Accesses to address outside the valid memory map will generate a bus error.

UART memory map

Absolute address (hex)	Register name	Width (in bits)	Access	Reset value	Section/ page
4006_A000	UART Baud Rate Register High (UART0_BDH)	8	R/W	00h	31.2.1/501
4006_A001	UART Baud Rate Register Low (UART0_BDL)	8	R/W	04h	31.2.2/502
4006_A002	UART Control Register 1 (UART0_C1)	8	R/W	00h	31.2.3/502
4006_A003	UART Control Register 2 (UART0_C2)	8	R/W	00h	31.2.4/504
4006_A004	UART Status Register 1 (UART0_S1)	8	R/W	C0h	31.2.5/505
4006_A005	UART Status Register 2 (UART0_S2)	8	R/W	00h	31.2.6/507
4006_A006	UART Control Register 3 (UART0_C3)	8	R/W	00h	31.2.7/509
4006_A007	UART Data Register (UART0_D)	8	R/W	00h	31.2.8/510
4006_A008	UART Match Address Registers 1 (UART0_MA1)	8	R/W	00h	31.2.9/511

Table continues on the next page...

UART memory map (continued)

Absolute address (hex)	Register name	Width (in bits)	Access	Reset value	Section/ page
4006_A009	UART Match Address Registers 2 (UART0_MA2)	8	R/W	00h	31.2.10/ 512
4006_A00A	UART Control Register 4 (UART0_C4)	8	R/W	0Fh	31.2.11/ 512
4006_A00B	UART Control Register 5 (UART0_C5)	8	R/W	00h	31.2.12/ 513

31.2.1 UART Baud Rate Register High (UARTx_BDH)

This register, along with UART_BDL, controls the prescale divisor for UART baud rate generation. The 13-bit baud rate setting [SBR12:SBR0] should only be updated when the transmitter and receiver are both disabled.

Address: 4006_A000h base + 0h offset = 4006_A000h

Bit	7	6	5	4	3	2	1	0
Read Write	LBKDIE	RXEDGIE	SBNS	SBR				
Reset	0	0	0	0	0	0	0	0

UARTx_BDH field descriptions

Field	Description
7 LBKDIE	LIN Break Detect Interrupt Enable (for LBKDIF) 0 Hardware interrupts from UART_S2[LBKDIF] disabled (use polling). 1 Hardware interrupt requested when UART_S2[LBKDIF] flag is 1.
6 RXEDGIE	RX Input Active Edge Interrupt Enable (for RXEDGIF) 0 Hardware interrupts from UART_S2[RXEDGIF] disabled (use polling). 1 Hardware interrupt requested when UART_S2[RXEDGIF] flag is 1.
5 SBNS	Stop Bit Number Select SBNS determines whether data characters are one or two stop bits. This bit should only be changed when the transmitter and receiver are both disabled. 0 One stop bit. 1 Two stop bit.
SBR	Baud Rate Modulo Divisor. The 13 bits in SBR[12:0] are referred to collectively as BR, and they set the modulo divide rate for the baud rate generator. When BR is 1 - 8191, the baud rate equals baud clock / ((OSR+1) × BR).

31.2.2 UART Baud Rate Register Low (UARTx_BDL)

This register, along with UART_BDH, control the prescale divisor for UART baud rate generation. The 13-bit baud rate setting [SBR12:SBR0] can only be updated when the transmitter and receiver are both disabled.

UART_BDL is reset to a non-zero value, so after reset the baud rate generator remains disabled until the first time the receiver or transmitter is enabled; that is, UART_C2[RE] or UART_C2[TE] bits are written to 1.

Address: 4006_A000h base + 1h offset = 4006_A001h

Bit	7	6	5	4	3	2	1	0
Read Write	SBR							
Reset	0	0	0	0	0	1	0	0

UARTx_BDL field descriptions

Field	Description
SBR	Baud Rate Modulo Divisor These 13 bits in SBR[12:0] are referred to collectively as BR. They set the modulo divide rate for the baud rate generator. When BR is 1 - 8191, the baud rate equals baud clock/((OSR+1) × BR).

31.2.3 UART Control Register 1 (UARTx_C1)

This read/write register controls various optional features of the UART system. This register should only be altered when the transmitter and receiver are both disabled.

Address: 4006_A000h base + 2h offset = 4006_A002h

Bit	7	6	5	4	3	2	1	0
Read Write	LOOPS	DOZEEN	RSRC	M	WAKE	ILT	PE	PT
Reset	0	0	0	0	0	0	0	0

UARTx_C1 field descriptions

Field	Description
7 LOOPS	Loop Mode Select Selects between loop back modes and normal 2-pin full-duplex modes. When LOOPS is set, the transmitter output is internally connected to the receiver input.

Table continues on the next page...

UARTx_C1 field descriptions (continued)

Field	Description
	0 Normal operation - UART_RX and UART_TX use separate pins. 1 Loop mode or single-wire mode where transmitter outputs are internally connected to receiver input. (See RSRC bit.) UART_RX pin is not used by UART.
6 DOZEEN	Doze Enable 0 UART is enabled in Wait mode. 1 UART is disabled in Wait mode.
5 RSRC	Receiver Source Select This bit has no meaning or effect unless the LOOPS bit is set to 1. When LOOPS is set, the receiver input is internally connected to the UART_TX pin and RSRC determines whether this connection is also connected to the transmitter output. 0 Provided LOOPS is set, RSRC is cleared, selects internal loop back mode and the UART does not use the UART_RX pins. 1 Single-wire UART mode where the UART_TX pin is connected to the transmitter output and receiver input.
4 M	9-Bit or 8-Bit Mode Select 0 Receiver and transmitter use 8-bit data characters. 1 Receiver and transmitter use 9-bit data characters.
3 WAKE	Receiver Wakeup Method Select 0 Idle-line wakeup. 1 Address-mark wakeup.
2 ILT	Idle Line Type Select Setting this bit to 1 ensures that the stop bits and logic 1 bits at the end of a character do not count toward the 10 to 13 bit times of logic high level needed by the idle line detection logic. 0 Idle character bit count starts after start bit. 1 Idle character bit count starts after stop bit.
1 PE	Parity Enable Enables hardware parity generation and checking. When parity is enabled, the bit immediately before the stop bit is treated as the parity bit. 0 No hardware parity generation or checking. 1 Parity enabled.
0 PT	Parity Type Provided parity is enabled (PE = 1), this bit selects even or odd parity. Odd parity means the total number of 1s in the data character, including the parity bit, is odd. Even parity means the total number of 1s in the data character, including the parity bit, is even. 0 Even parity. 1 Odd parity.

31.2.4 UART Control Register 2 (UARTx_C2)

This register can be read or written at any time.

Address: 4006_A000h base + 3h offset = 4006_A003h

Bit	7	6	5	4	3	2	1	0
Read Write	TIE	TCIE	RIE	ILIE	TE	RE	RWU	SBK
Reset	0	0	0	0	0	0	0	0

UARTx_C2 field descriptions

Field	Description
7 TIE	Transmit Interrupt Enable for TDRE 0 Hardware interrupts from TDRE disabled; use polling. 1 Hardware interrupt requested when TDRE flag is 1.
6 TCIE	Transmission Complete Interrupt Enable for TC 0 Hardware interrupts from TC disabled; use polling. 1 Hardware interrupt requested when TC flag is 1.
5 RIE	Receiver Interrupt Enable for RDRF 0 Hardware interrupts from RDRF disabled; use polling. 1 Hardware interrupt requested when RDRF flag is 1.
4 ILIE	Idle Line Interrupt Enable for IDLE 0 Hardware interrupts from IDLE disabled; use polling. 1 Hardware interrupt requested when IDLE flag is 1.
3 TE	Transmitter Enable TE must be 1 to use the UART transmitter. When TE is set, the UART forces the UART_TX pin to act as an output for the UART system. When the UART is configured for single-wire operation (LOOPS = RSRC = 1), TXDIR controls the direction of traffic on the single UART communication line (UART_TX pin). TE can also queue an idle character by clearing TE then setting TE while a transmission is in progress. When TE is written to 0, the transmitter keeps control of the port UART_TX pin until any data, queued idle, or queued break character finishes transmitting before allowing the pin to tristate. 0 Transmitter disabled. 1 Transmitter enabled.
2 RE	Receiver Enable When the UART receiver is off or LOOPS is set, the UART_RX pin is not used by the UART . When RE is written to 0, the receiver finishes receiving the current character (if any). 0 Receiver disabled. 1 Receiver enabled.
1 RWU	Receiver Wakeup Control

Table continues on the next page...

UARTx_C2 field descriptions (continued)

Field	Description
	This bit can be written to 1 to place the UART receiver in a standby state where it waits for automatic hardware detection of a selected wakeup condition. The wakeup condition is an idle line between messages, WAKE = 0, idle-line wakeup, or a logic 1 in the most significant data bit in a character, WAKE = 1, address-mark wakeup. Application software sets RWU and, normally, a selected hardware condition automatically clears RWU. 0 Normal UART receiver operation. 1 UART receiver in standby waiting for wakeup condition.
0 SBK	Send Break Writing a 1 and then a 0 to SBK queues a break character in the transmit data stream. Additional break characters of 10 to 13, or 13 to 16 if BRK13 = 1, bit times of logic 0 are queued as long as SBK is set. Depending on the timing of the set and clear of SBK relative to the information currently being transmitted, a second break character may be queued before software clears SBK. 0 Normal transmitter operation. 1 Queue break character(s) to be sent.

31.2.5 UART Status Register 1 (UARTx_S1)

Address: 4006_A000h base + 4h offset = 4006_A004h

Bit	7	6	5	4	3	2	1	0
Read	TDRE	TC	RDRF	IDLE	OR	NF	FE	PF
Write				w1c	w1c	w1c	w1c	w1c
Reset	1	1	0	0	0	0	0	0

UARTx_S1 field descriptions

Field	Description
7 TDRE	Transmit Data Register Empty Flag TDRE is set out of reset and whenever there is room to write data to the transmit data buffer. To clear TDRE, write to the UART data register (UART_D). 0 Transmit data buffer full. 1 Transmit data buffer empty.
6 TC	Transmission Complete Flag TC is set out of reset and when TDRE is set and no data, preamble, or break character is being transmitted. TC is cleared automatically by one of the following: • Write to the UART data register (UART_D) to transmit new data • Queue a preamble by changing TE from 0 to 1 • Queue a break character by writing 1 to UART_C2[SBK] 0 Transmitter active (sending data, a preamble, or a break). 1 Transmitter idle (transmission activity complete).

Table continues on the next page...

UARTx_S1 field descriptions (continued)

Field	Description
5 RDRF	Receive Data Register Full Flag RDRF becomes set whenever the receive data buffer is full. To clear RDRF, read the UART data register (UART_D). 0 Receive data buffer empty. 1 Receive data buffer full.
4 IDLE	Idle Line Flag IDLE is set when the UART receive line becomes idle for a full character time after a period of activity. When ILT is cleared, the receiver starts counting idle bit times after the start bit. If the receive character is all 1s, these bit times and the stop bits time count toward the full character time of logic high, 10 to 13 bit times, needed for the receiver to detect an idle line. When ILT is set, the receiver doesn't start counting idle bit times until after the stop bits. The stop bits and any logic high bit times at the end of the previous character do not count toward the full character time of logic high needed for the receiver to detect an idle line. To clear IDLE, write logic 1 to the IDLE flag. After IDLE has been cleared, it cannot become set again until after a new character has been received and RDRF has been set. IDLE is set only once even if the receive line remains idle for an extended period. 0 No idle line detected. 1 Idle line was detected.
3 OR	Receiver Overrun Flag OR is set when a new serial character is ready to be transferred to the receive data buffer, but the previously received character has not been read from UART_D yet. In this case, the new character, and all associated error information, is lost because there is no room to move it into UART_D. To clear OR, write a logic 1 to the OR flag. 0 No overrun. 1 Receive overrun (new UART data lost).
2 NF	Noise Flag The advanced sampling technique used in the receiver takes three samples in each of the received bits. If any of these samples disagrees with the rest of the samples within any bit time in the frame, the flag NF is set at the same time as RDRF is set for the character. To clear NF, write logic one to the NF. 0 No noise detected. 1 Noise detected in the received character in UART_D.
1 FE	Framing Error Flag FE is set at the same time as RDRF when the receiver detects a logic 0 where a stop bit was expected. This suggests the receiver was not properly aligned to a character frame. To clear FE, write a logic one to the FE flag. 0 No framing error detected. This does not guarantee the framing is correct. 1 Framing error.
0 PF	Parity Error Flag PF is set at the same time as RDRF when parity is enabled (PE = 1) and the parity bit in the received character does not agree with the expected parity value. To clear PF, write a logic one to the PF.

Table continues on the next page...

UARTx_S1 field descriptions (continued)

Field	Description
	0 No parity error. 1 Parity error.

31.2.6 UART Status Register 2 (UARTx_S2)

This register contains one read-only status flag.

When using an internal oscillator in a LIN system, it is necessary to raise the break detection threshold one bit time. Under the worst case timing conditions allowed in LIN, it is possible that a 0x00 data character can appear to be 10.26 bit times long at a slave running 14% faster than the master. This would trigger normal break detection circuitry designed to detect a 10-bit break symbol. When the LBKDE bit is set, framing errors are inhibited and the break detection threshold increases, preventing false detection of a 0x00 data character as a LIN break symbol.

Address: 4006_A000h base + 5h offset = 4006_A005h

Bit	7	6	5	4	3	2	1	0
Read	LBKDIF	RXEDGIF	MSBF	RXINV	RWUID	BRK13	LBKDE	RAF
Write								
Reset	0	0	0	0	0	0	0	0

UARTx_S2 field descriptions

Field	Description
7 LBKDIF	LIN Break Detect Interrupt Flag LBKDIF is set when the LIN break detect circuitry is enabled and a LIN break character is detected. LBKDIF is cleared by writing a 1 to it. 0 No LIN break character has been detected. 1 LIN break character has been detected.
6 RXEDGIF	UART_RX Pin Active Edge Interrupt Flag RXEDGIF is set when an active edge, falling if RXINV = 0, rising if RXINV=1, on the UART_RX pin occurs. RXEDGIF is cleared by writing a 1 to it. 0 No active edge on the receive pin has occurred. 1 An active edge on the receive pin has occurred.
5 MSBF	MSB First Setting this bit reverses the order of the bits that are transmitted and received on the wire. This bit does not affect the polarity of the bits, the location of the parity bit or the location of the start or stop bits. This bit should only be changed when the transmitter and receiver are both disabled.

Table continues on the next page...

UARTx_S2 field descriptions (continued)

Field	Description
	0 LSB (bit0) is the first bit that is transmitted following the start bit. Further, the first bit received after the start bit is identified as bit0. 1 MSB (bit9, bit8, bit7 or bit6) is the first bit that is transmitted following the start bit depending on the setting of C1[M], C1[PE] and C4[M10]. Further, the first bit received after the start bit is identified as bit9, bit8, bit7 or bit6 depending on the setting of C1[M] and C1[PE].
4 RXINV	Receive Data Inversion Setting this bit reverses the polarity of the received data input. **NOTE:** Setting RXINV inverts the UART_RXD input for all cases: data bits, start and stop bits, break, and idle. 0 Receive data not inverted. 1 Receive data inverted.
3 RWUID	Receive Wake Up Idle Detect RWUID controls whether the idle character that wakes up the receiver sets the IDLE bit. This bit should only be changed when the receiver is disabled. 0 During receive standby state (RWU = 1), the IDLE bit does not get set upon detection of an idle character. 1 During receive standby state (RWU = 1), the IDLE bit gets set upon detection of an idle character.
2 BRK13	Break Character Generation Length BRK13 selects a longer transmitted break character length. Detection of a framing error is not affected by the state of this bit. This bit should only be changed when the transmitter is disabled. 0 Break character is transmitted with length of 10 bit times (if M = 0, SBNS = 0) or 11 (if M = 1, SBNS = 0 or M = 0, SBNS = 1) or 12 (if M = 1, SBNS = 1 or M10 = 1, SNBS = 0) or 13 (if M10 = 1, SNBS = 1). 1 Break character is transmitted with length of 13 bit times (if M = 0, SBNS = 0) or 14 (if M = 1, SBNS = 0 or M = 0, SBNS = 1) or 15 (if M = 1, SBNS = 1 or M10 = 1, SNBS = 0) or 16 (if M10 = 1, SNBS = 1).
1 LBKDE	LIN Break Detection Enable LBKDE selects a longer break character detection length. While LBKDE is set, framing error (FE) and receive data register full (RDRF) flags are prevented from setting. 0 Break character is detected at length 10 bit times (if M = 0, SBNS = 0) or 11 (if M = 1, SBNS = 0 or M = 0, SBNS = 1) or 12 (if M = 1, SBNS = 1 or M10 = 1, SNBS = 0) or 13 (if M10 = 1, SNBS = 1). 1 Break character is detected at length of 11 bit times (if M = 0, SBNS = 0) or 12 (if M = 1, SBNS = 0 or M = 0, SBNS = 1) or 14 (if M = 1, SBNS = 1 or M10 = 1, SNBS = 0) or 15 (if M10 = 1, SNBS = 1).
0 RAF	Receiver Active Flag RAF is set when the UART receiver detects the beginning of a valid start bit, and RAF is cleared automatically when the receiver detects an idle line. 0 UART receiver idle waiting for a start bit. 1 UART receiver active (UART_RXD input not idle).

31.2.7 UART Control Register 3 (UARTx_C3)

Address: 4006_A000h base + 6h offset = 4006_A006h

Bit	7	6	5	4	3	2	1	0
Read Write	R8T9	R9T8	TXDIR	TXINV	ORIE	NEIE	FEIE	PEIE
Reset	0	0	0	0	0	0	0	0

UARTx_C3 field descriptions

Field	Description
7 R8T9	Receive Bit 8 / Transmit Bit 9 When the UART is configured for 9-bit data (M = 1), R8 can be thought of as a ninth receive data bit to the left of the msb of the buffered data in the UART_D register. When reading 9-bit data, read R8 before reading UART_D because reading UART_D completes automatic flag clearing sequences that could allow R8 and UART_D to be overwritten with new data. When the UART is configured for 10-bit data (M10 = 1), T9 may be thought of as a tenth transmit data bit. When writing 10-bit data, the entire 10-bit value is transferred to the UART transmit buffer when UART_D is written so T9 and T8 should be written, if it needs to change from its previous value, before UART_D is written. If T9 and T8 do not need to change in the new value, such as when it is used to generate mark or space parity, they need not be written each time UART_D is written.
6 R9T8	Receive Bit 9 / Transmit Bit 8 When the UART is configured for 9-bit data (M = 1), T8 may be thought of as a ninth transmit data bit to the left of the msb of the data in the UART_D register. When writing 9-bit data, the entire 9-bit value is transferred to the UART transmit buffer after UART_D is written so T8 should be written, if it needs to change from its previous value, before UART_D is written. If T8 does not need to change in the new value, such as when it is used to generate mark or space parity, it need not be written each time UART_D is written. When the UART is configured for 10-bit data (M10 = 1), R9 can be thought of as a tenth receive data bit. When reading 10-bit data, read R9 and R8 before reading UART_D because reading UART_D completes automatic flag clearing sequences that could allow R8, R9 and UART_D to be overwritten with new data.
5 TXDIR	UART_TX Pin Direction in Single-Wire Mode When the UART is configured for single-wire half-duplex operation (LOOPS = RSRC = 1), this bit determines the direction of data at the UART_TXD pin. When clearing TXDIR, the transmitter will finish receiving the current character (if any) before the receiver starts receiving data from the UART_TXD pin. 0 UART_TXD pin is an input in single-wire mode. 1 UART_TXD pin is an output in single-wire mode.
4 TXINV	Transmit Data Inversion Setting this bit reverses the polarity of the transmitted data output. **NOTE:** Setting TXINV inverts the UART_TXD output for all cases: data bits, start and stop bits, break, and idle. 0 Transmit data not inverted. 1 Transmit data inverted.
3 ORIE	Overrun Interrupt Enable This bit enables the overrun flag (OR) to generate hardware interrupt requests.

Table continues on the next page...

UARTx_C3 field descriptions (continued)

Field	Description
	0 OR interrupts disabled; use polling. 1 Hardware interrupt requested when OR is set.
2 NEIE	Noise Error Interrupt Enable This bit enables the noise flag (NF) to generate hardware interrupt requests. 0 NF interrupts disabled; use polling. 1 Hardware interrupt requested when NF is set.
1 FEIE	Framing Error Interrupt Enable This bit enables the framing error flag (FE) to generate hardware interrupt requests. 0 FE interrupts disabled; use polling. 1 Hardware interrupt requested when FE is set.
0 PEIE	Parity Error Interrupt Enable This bit enables the parity error flag (PF) to generate hardware interrupt requests. 0 PF interrupts disabled; use polling). 1 Hardware interrupt requested when PF is set.

31.2.8 UART Data Register (UARTx_D)

This register is actually two separate registers. Reads return the contents of the read-only receive data buffer and writes go to the write-only transmit data buffer. Reads and writes of this register are also involved in the automatic flag clearing mechanisms for some of the UART status flags.

Address: 4006_A000h base + 7h offset = 4006_A007h

Bit	7	6	5	4	3	2	1	0
Read Write	R7T7	R6T6	R5T5	R4T4	R3T3	R2T2	R1T1	R0T0
Reset	0	0	0	0	0	0	0	0

UARTx_D field descriptions

Field	Description
7 R7T7	Read receive data buffer 7 or write transmit data buffer 7.
6 R6T6	Read receive data buffer 6 or write transmit data buffer 6.
5 R5T5	Read receive data buffer 5 or write transmit data buffer 5.

Table continues on the next page...

UARTx_D field descriptions (continued)

Field	Description
4 R4T4	Read receive data buffer 4 or write transmit data buffer 4.
3 R3T3	Read receive data buffer 3 or write transmit data buffer 3.
2 R2T2	Read receive data buffer 2 or write transmit data buffer 2.
1 R1T1	Read receive data buffer 1 or write transmit data buffer 1.
0 R0T0	Read receive data buffer 0 or write transmit data buffer 0.

31.2.9 UART Match Address Registers 1 (UARTx_MA1)

The MA1 and MA2 registers are compared to input data addresses when the most significant bit is set and the associated C4[MAEN] bit is set. If a match occurs, the following data is transferred to the data register. If a match fails, the following data is discarded. Software should only write a MA register when the associated C4[MAEN] bit is clear.

Address: 4006_A000h base + 8h offset = 4006_A008h

Bit	7	6	5	4	3	2	1	0
Read Write	MA							
Reset	0	0	0	0	0	0	0	0

UARTx_MA1 field descriptions

Field	Description
MA	Match Address

31.2.10 UART Match Address Registers 2 (UARTx_MA2)

The MA1 and MA2 registers are compared to input data addresses when the most significant bit is set and the associated C4[MAEN] bit is set. If a match occurs, the following data is transferred to the data register. If a match fails, the following data is discarded. Software should only write a MA register when the associated C4[MAEN] bit is clear.

Address: 4006_A000h base + 9h offset = 4006_A009h

Bit	7	6	5	4	3	2	1	0
Read Write	MA							
Reset	0	0	0	0	0	0	0	0

UARTx_MA2 field descriptions

Field	Description
MA	Match Address

31.2.11 UART Control Register 4 (UARTx_C4)

Address: 4006_A000h base + Ah offset = 4006_A00Ah

Bit	7	6	5	4	3	2	1	0
Read Write	MAEN1	MAEN2	M10	OSR				
Reset	0	0	0	0	1	1	1	1

UARTx_C4 field descriptions

Field	Description
7 MAEN1	Match Address Mode Enable 1 Refer to Match address operation for more information. 0 All data received is transferred to the data buffer if MAEN2 is cleared. 1 All data received with the most significant bit cleared, is discarded. All data received with the most significant bit set, is compared with contents of MA1 register. If no match occurs, the data is discarded. If match occurs, data is transferred to the data buffer.
6 MAEN2	Match Address Mode Enable 2 Refer to Match address operation for more information. 0 All data received is transferred to the data buffer if MAEN1 is cleared. 1 All data received with the most significant bit cleared, is discarded. All data received with the most significant bit set, is compared with contents of MA2 register. If no match occurs, the data is discarded. If match occurs, data is transferred to the data buffer.

Table continues on the next page...

UARTx_C4 field descriptions (continued)

Field	Description
5 M10	10-bit Mode select The M10 bit causes a tenth bit to be part of the serial transmission. This bit should only be changed when the transmitter and receiver are both disabled. 0 Receiver and transmitter use 8-bit or 9-bit data characters. 1 Receiver and transmitter use 10-bit data characters.
OSR	Over Sampling Ratio This field configures the oversampling ratio for the receiver between 4x (00011) and 32x (11111). Writing an invalid oversampling ratio will default to an oversampling ratio of 16 (01111). This field should only be changed when the transmitter and receiver are both disabled.

31.2.12 UART Control Register 5 (UARTx_C5)

Address: 4006_A000h base + Bh offset = 4006_A00Bh

Bit	7	6	5	4	3	2	1	0
Read	0						BOTHEDGE	RESYNCDIS
Write								
Reset	0	0	0	0	0	0	0	0

UARTx_C5 field descriptions

Field	Description
7–2 Reserved	This field is reserved. This read-only field is reserved and always has the value 0.
1 BOTHEDGE	Both Edge Sampling Enables sampling of the received data on both edges of the baud rate clock, effectively doubling the number of times the receiver samples the input data for a given oversampling ratio. This bit must be set for oversampling ratios between x4 and x7 and is optional for higher oversampling ratios. This bit should only be changed when the receiver is disabled. 0 Receiver samples input data using the rising edge of the baud rate clock. 1 Receiver samples input data using the rising and falling edge of the baud rate clock.
0 RESYNCDIS	Resynchronization Disable When set, disables the resynchronization of the received data word when a data one followed by data zero transition is detected. This bit should only be changed when the receiver is disabled. 0 Resynchronization during received data word is supported 1 Resynchronization during received data word is disabled

31.3 Functional description

The UART supports full-duplex, asynchronous, NRZ serial communication and comprises a baud rate generator, transmitter, and receiver block. The transmitter and receiver operate independently, although they use the same baud rate generator. The following describes each of the blocks of the UART.

31.3.1 Baud rate generation

A 13-bit modulus counter in the baud rate generator derive the baud rate for both the receiver and the transmitter. The value from 1 to 8191 written to SBR[12:0] determines the baud clock divisor for the asynchronous UART baud clock. The SBR bits are in the UART baud rate registers, BDH and BDL. The baud rate clock drives the receiver, while the transmitter is driven by the baud rate clock divided by the over sampling ratio. Depending on the over sampling ratio, the receiver has an acquisition rate of 4 to 32 samples per bit time.

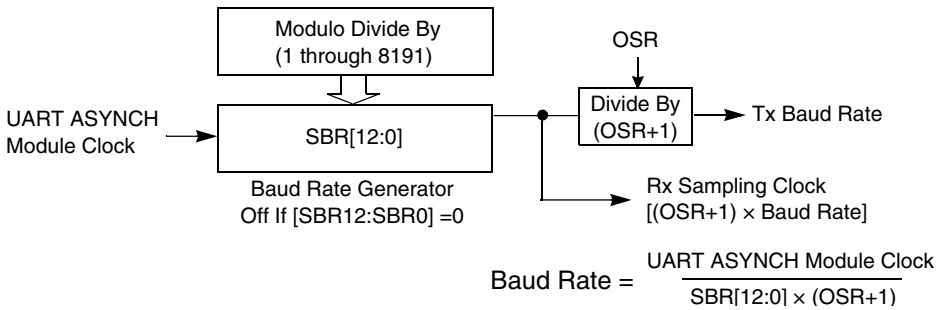

Figure 31-27. UART baud rate generation

Baud rate generation is subject to two sources of error:

- Integer division of the module clock may not give the exact target frequency.
- Synchronization with the asynchronous UART baud clock can cause phase shift.

31.3.2 Transmitter functional description

This section describes the overall block diagram for the UART transmitter, as well as specialized functions for sending break and idle characters.

The transmitter output (UART_TX) idle state defaults to logic high, C3[TXINV] is cleared following reset. The transmitter output is inverted by setting C3[TXINV]. The transmitter is enabled by setting the C2[TE] bit. This queues a preamble character that is one full character frame of the idle state. The transmitter then remains idle until data is available in the transmit data buffer. Programs store data into the transmit data buffer by writing to the UART data register.

The central element of the UART transmitter is the transmit shift register that is 10-bit to 13 bits long depending on the setting in the C1[M], C2[M10] and BDH[SBNS] control bits. For the remainder of this section, assume C1[M], C2[M10] and BDH[SBNS] are cleared, selecting the normal 8-bit data mode. In 8-bit data mode, the shift register holds a start bit, eight data bits, and a stop bit. When the transmit shift register is available for a new UART character, the value waiting in the transmit data register is transferred to the shift register, synchronized with the baud rate clock, and the transmit data register empty (S1[TDRE]) status flag is set to indicate another character may be written to the transmit data buffer at UART_D.

If no new character is waiting in the transmit data buffer after a stop bit is shifted out the UART_TX pin, the transmitter sets the transmit complete flag and enters an idle mode, with UART_TX high, waiting for more characters to transmit.

Writing 0 to C2[TE] does not immediately disable the transmitter. The current transmit activity in progress must first be completed. This includes data characters in progress, queued idle characters, and queued break characters.

31.3.2.1 Send break and queued idle

The UART_C2[SBK] bit sends break characters originally used to gain the attention of old teletype receivers. Break characters are a full character time of logic 0, 10-bit to 12-bit times including the start and stop bits. A longer break of 13-bit times can be enabled by setting UART_S2[BRK13]. Normally, a program would wait for UART_S1[TDRE] to become set to indicate the last character of a message has moved to the transmit shifter, write 1, and then write 0 to the UART_C2[SBK] bit. This action queues a break character to be sent as soon as the shifter is available. If UART_C2[SBK] remains 1 when the queued break moves into the shifter, synchronized to the baud rate clock, an additional break character is queued. If the receiving device is another Freescale Semiconductor UART, the break characters are received as 0s in all data bits and a framing error (UART_S1[FE] = 1) occurs.

When idle-line wakeup is used, a full character time of idle (logic 1) is needed between messages to wake up any sleeping receivers. Normally, a program would wait for UART_S1[TDRE] to become set to indicate the last character of a message has moved to

the transmit shifter, then write 0 and then write 1 to the UART_C2[TE] bit. This action queues an idle character to be sent as soon as the shifter is available. As long as the character in the shifter does not finish whileUART_C2[TE] is cleared, the UART transmitter never actually releases control of the UART_TX pin.

The length of the break character is affected by the UART_S2[BRK13], UART_C1[M] and UART_C4[M10] bits as shown below.

Table 31-27. Break character length

BRK13	M	M10	SBNS	Break character length
0	0	0	0	10 bit times
0	0	0	1	11 bit times
0	1	0	0	11 bit times
0	1	0	1	12 bit times
0	X	1	0	12 bit times
0	X	1	1	13 bit times
1	0	0	0	13 bit times
1	0	0	1	14 bit times
1	1	0	0	14 bit times
1	1	0	1	15 bit times
1	X	1	0	15 bit times
1	X	1	1	16 bit times

31.3.3 Receiver functional description

In this section, the receiver block diagram is a guide for the overall receiver functional description. Next, the data sampling technique used to reconstruct receiver data is described in more detail. Finally, two variations of the receiver wakeup function are explained.

The receiver input is inverted by setting UART_S2[RXINV]. The receiver is enabled by setting the UART_C2[RE] bit. Character frames consist of a start bit of logic 0, eight to ten data bits (msb or lsb first), and one or two stop bits of logic 1. For information about 9-bit or 10-bit data mode, refer to 8-bit, 9-bit and 10-bit data modes. For the remainder of this discussion, assume the UART is configured for normal 8-bit data mode.

After receiving the stop bit into the receive shifter, and provided the receive data register is not already full, the data character is transferred to the receive data register and the receive data register full (UART_S1[RDRF]) status flag is set. If UART_S1[RDRF] was already set indicating the receive data register (buffer) was already full, the overrun (OR)

status flag is set and the new data is lost. Because the UART receiver is double-buffered, the program has one full character time after UART_S1[RDRF] is set before the data in the receive data buffer must be read to avoid a receiver overrun.

When a program detects that the receive data register is full (UART_S1[RDRF] = 1), it gets the data from the receive data register by reading UART_D. Refer to Interrupts and status flags for details about flag clearing.

31.3.3.1 Data sampling technique

The UART receiver supports an oversampling rate of between 4× and 32× of the baud rate clock for sampling. The receiver starts by taking logic level samples at the oversampling rate times the baud rate to search for a falling edge on the UART_RX serial data input pin. A falling edge is defined as a logic 0 sample after three consecutive logic 1 samples. The oversampling baud rate clock divides the bit time into 4 to 32 segments from 1 to OSR (where OSR is the configured oversampling ratio). When a falling edge is located, three more samples are taken at (OSR/2), (OSR/2)+1, and (OSR/2)+2 to make sure this was a real start bit and not merely noise. If at least two of these three samples are 0, the receiver assumes it is synchronized to a receive character. If another falling edge is detected before the receiver is considered synchronized, the receiver restarts the sampling from the first segment.

The receiver then samples each bit time, including the start and stop bits, at (OSR/2), (OSR/2)+1, and (OSR/2)+2 to determine the logic level for that bit. The logic level is interpreted to be that of the majority of the samples taken during the bit time. If any sample in any bit time, including the start and stop bits, in a character frame fails to agree with the logic level for that bit, the noise flag (UART_S1[NF]) is set when the received character is transferred to the receive data buffer.

When the UART receiver is configured to sample on both edges of the baud rate clock, the number of segments in each received bit is effectively doubled (from 1 to OSR*2). The start and data bits are then sampled at OSR, OSR+1 and OSR+2. Sampling on both edges of the clock must be enabled for oversampling rates of 4× to 7× and is optional for higher oversampling rates.

The falling edge detection logic continuously looks for falling edges. If an edge is detected, the sample clock is resynchronized to bit times (unless resynchronization has been disabled). This improves the reliability of the receiver in the presence of noise or mismatched baud rates. It does not improve worst case analysis because some characters do not have any extra falling edges anywhere in the character frame.

In the case of a framing error, provided the received character was not a break character, the sampling logic that searches for a falling edge is filled with three logic 1 samples so that a new start bit can be detected almost immediately.

31.3.3.2 Receiver wakeup operation

Receiver wakeup is a hardware mechanism that allows an UART receiver to ignore the characters in a message intended for a different UART receiver. In such a system, all receivers evaluate the first character(s) of each message, and as soon as they determine the message is intended for a different receiver, they write logic 1 to the receiver wake up control bit(UART_C2[RWU]). When RWU bit is set, the status flags associated with the receiver, with the exception of the idle bit, IDLE, when UART_S2[RWUID] bit is set, are inhibited from setting, thus eliminating the software overhead for handling the unimportant message characters. At the end of a message, or at the beginning of the next message, all receivers automatically force UART_C2[RWU] to 0 so all receivers wake up in time to look at the first character(s) of the next message.

31.3.3.2.1 Idle-line wakeup

When wake is cleared, the receiver is configured for idle-line wakeup. In this mode, UART_C2[RWU] is cleared automatically when the receiver detects a full character time of the idle-line level. The UART_C1[M] and UART_C4[M10] control bit selects 8-bit to 10-bit data mode and the UART_BDH[SBNS] bit selects 1-bit or 2-bit stop bit number that determines how many bit times of idle are needed to constitute a full character time, 10 to 13 bit times because of the start and stop bits.

When UART_C2[RWU] is one and UART_S2[RWUID] is zero, the idle condition that wakes up the receiver does not set the UART_S1[IDLE] flag. The receiver wakes up and waits for the first data character of the next message that sets the UART_S1[RDRF] flag and generates an interrupt if enabled. When UART_S2[RWUID] is one, any idle condition sets the UART_S1[IDLE] flag and generates an interrupt if enabled, regardless of whether UART_C2[RWU] is zero or one.

The idle-line type (UART_C1[ILT]) control bit selects one of two ways to detect an idle line. When UART_C1[ILT] is cleared, the idle bit counter starts after the start bit so the stop bit and any logic 1s at the end of a character count toward the full character time of idle. When UART_C1[ILT] is set, the idle bit counter does not start until after the stop bit time, so the idle detection is not affected by the data in the last character of the previous message.

31.3.3.2.2 Address-mark wakeup

When wake is set, the receiver is configured for address-mark wakeup. In this mode, UART_C2[RWU] is cleared automatically when the receiver detects a logic 1 in the most significant bit of a received character.

Address-mark wakeup allows messages to contain idle characters, but requires the msb be reserved for use in address frames. The logic 1 in the msb of an address frame clears the UART_C2[RWU] bit before the stop bits are received and sets the UART_S1[RDRF] flag. In this case, the character with the msb set is received even though the receiver was sleeping during most of this character time.

31.3.3.2.3 Match address operation

Match address operation is enabled when the UART_C4[MAEN1] or UART_C4[MAEN2] bit is set. In this function, a frame received by the UART_RX pin with a logic 1 in the bit position immediately preceding the stop bit is considered an address and is compared with the associated MA1 or MA2 register. The frame is only transferred to the receive buffer, and UART_S1[RDRF] is set, if the comparison matches. All subsequent frames received with a logic 0 in the bit position immediately preceding the stop bit are considered to be data associated with the address and are transferred to the receive data buffer. If no marked address match occurs then no transfer is made to the receive data buffer, and all following frames with logic zero in the bit position immediately preceding the stop bit are also discarded. If both the UART_C4[MAEN1] and UART_C4[MAEN2] bits are negated, the receiver operates normally and all data received is transferred to the receive data buffer.

Match Address operation functions in the same way for both MA1 and MA2 registers.

- If only one of UART_C4[MAEN1] and UART_C4[MAEN2] is asserted, a marked address is compared only with the associated match register and data is transferred to the receive data buffer only on a match.
- If UART_C4[MAEN1] and UART_C4[MAEN2] are asserted, a marked address is compared with both match registers and data is transferred only on a match with either register.

31.3.4 Additional UART functions

The following sections describe additional UART functions.

31.3.4.1 8-bit, 9-bit and 10-bit data modes

The UART system, transmitter and receiver, can be configured to operate in 9-bit data mode by setting the UART_C1[M] or 10-bit data mode by setting UART_C4[M10]. In 9-bit mode, there is a ninth data bit to the left of the msb of the UART data register, in 10-bit mode there is a tenth data bit. For the transmit data buffer, these bits are stored in T8 and T9 in UART_C3. For the receiver, these bits are held in UART_C3[R8] and UART_C3[R9].

For coherent writes to the transmit data buffer, write to UART_C3[T8] and UART_C3[T9] before writing to UART_D.

If the bit values to be transmitted as the ninth and tenth bit of a new character are the same as for the previous character, it is not necessary to write to T8 and T9 again. When data is transferred from the transmit data buffer to the transmit shifter, the value in T8 and T9 is copied at the same time data is transferred from UART_D to the shifter.

The 9-bit data mode is typically used with parity to allow eight bits of data plus the parity in the ninth bit, or it is used with address-mark wakeup so the ninth data bit can serve as the wakeup bit. The 10-bit data mode is typically used with parity and address-mark wakeup so the ninth data bit can serve as the wakeup bit and the tenth bit as the parity bit. In custom protocols, the ninth and/or tenth bits can also serve as software-controlled markers.

31.3.4.2 Loop mode

When UART_C1[LOOPS] is set, the UART_C1[RSRC] bit in the same register chooses between loop mode (UART_C1[RSRC] = 0) or single-wire mode (UART_C1[RSRC] = 1). Loop mode is sometimes used to check software, independent of connections in the external system, to help isolate system problems. In this mode, the transmitter output is internally connected to the receiver input and the UART_RX pin is not used by the UART.

31.3.4.3 Single-wire operation

When UART_C1[LOOPS] is set, the RSRC bit in the same register chooses between loop mode (UART_C1[RSRC] = 0) or single-wire mode (UART_C1[RSRC] = 1). Single-wire mode implements a half-duplex serial connection. The receiver is internally connected to the transmitter output and to the UART_TX pin (the UART_RX pin is not used).

In single-wire mode, the UART_C3[TXDIR] bit controls the direction of serial data on the UART_TX pin. When UART_C3[TXDIR] is cleared, the UART_TX pin is an input to the UART receiver and the transmitter is temporarily disconnected from the UART_TX pin so an external device can send serial data to the receiver. When UART_C3[TXDIR] is set, the UART_TXD pin is an output driven by the transmitter, the internal loop back connection is disabled, and as a result the receiver cannot receive characters that are sent out by the transmitter.

31.3.5 Interrupts and status flags

The UART system generates three separate interrupts to reduce the amount of software needed to isolate the cause of the interrupt. One interrupt is associated with the transmitter for TDRE and TC events. Another interrupt is associated with the receiver for RDRF, IDLE, RXEDGIF, and LBKDIF events. A third interrupt is used for OR, NF, FE, and PF error conditions. Each of these ten interrupt sources can be separately masked by local interrupt enable masks. The flags can be polled by software when the local masks are cleared to disable generation of hardware interrupt requests.

The UART transmitter has two status flags that can optionally generate hardware interrupt requests. Transmit data register empty (UART_S1[TDRE]) indicates when there is room in the transmit data buffer to write another transmit character to UART_D. If the transmit interrupt enable (UART_C2[TIE]) bit is set, a hardware interrupt is requested when UART_S1[TDRE] is set. Transmit complete (UART_S1[TC]) indicates that the transmitter is finished transmitting all data, preamble, and break characters and is idle with UART_TX at the inactive level. This flag is often used in systems with modems to determine when it is safe to turn off the modem. If the transmit complete interrupt enable (UART_C2[TCIE]) bit is set, a hardware interrupt is requested when UART_S1[TC] is set. Instead of hardware interrupts, software polling may be used to monitor the UART_S1[TDRE] and UART_S1[TC] status flags if the corresponding UART_C2[TIE] or UART_C2[TCIE] local interrupt masks are cleared.

When a program detects that the receive data register is full (UART_S1[RDRF] = 1), it gets the data from the receive data register by reading UART_D. The UART_S1[RDRF] flag is cleared by reading UART_D.

The IDLE status flag includes logic that prevents it from getting set repeatedly when the UART_RX line remains idle for an extended period of time. IDLE is cleared by writing 1 to the UART_S1[IDLE] flag. After UART_S1[IDLE] has been cleared, it cannot become set again until the receiver has received at least one new character and has set UART_S1[RDRF].

If the associated error was detected in the received character that caused UART_S1[RDRF] to be set, the error flags - noise flag (UART_S1[NF]), framing error (UART_S1[FE]), and parity error flag (UART_S1[PF]) - are set at the same time as UART_S1[RDRF]. These flags are not set in overrun cases.

If UART_S1[RDRF] was already set when a new character is ready to be transferred from the receive shifter to the receive data buffer, the overrun (UART_S1[OR]) flag is set instead of the data along with any associated NF, FE, or PF condition is lost.

At any time, an active edge on the UART_RX serial data input pin causes the UART_S2[RXEDGIF] flag to set. The UART_S2[RXEDGIF] flag is cleared by writing a 1 to it. This function depends on the receiver being enabled (UART_C2[RE] = 1).

Chapter 32
General-Purpose Input/Output (GPIO)

32.1 Introduction

NOTE

For the chip-specific implementation details of this module's instances, see the chip configuration information.

The general-purpose input and output (GPIO) module communicates to the processor core via a zero wait state interface (IOPORT) for maximum pin performance. The GPIO registers support 8-bit, 16-bit or 32-bit accesses.

The GPIO data direction and output data registers control the direction and output data of each pin when the pin is configured for the GPIO function. The GPIO input data register displays the logic value on each pin when the pin is configured for any digital function, provided the corresponding Port Control and Interrupt module for that pin is enabled.

Efficient bit manipulation of the general-purpose outputs is supported through the addition of set, clear, and toggle write-only registers for each port output data register.

32.1.1 Features

- Features of the GPIO module include:
  - Pin input data register visible in all digital pin-multiplexing modes
  - Pin output data register with corresponding set/clear/toggle registers
  - Pin data direction register
  - Zero wait state access to GPIO registers through IOPORT

NOTE

GPIO module is clocked by system clock.

32.1.2 Modes of operation

The following table depicts different modes of operation and the behavior of the GPIO module in these modes.

Table 32-1. Modes of operation

Modes of operation	Description
Run	The GPIO module operates normally.
Wait	The GPIO module operates normally.
Stop	The GPIO module is disabled.
Debug	The GPIO module operates normally.

32.1.3 GPIO signal descriptions

Table 32-2. GPIO signal descriptions

GPIO signal descriptions	Description	I/O
PORTA31–PORTA0	General-purpose input/output	I/O
PORTB31–PORTB0	General-purpose input/output	I/O

NOTE

Not all pins within each port are implemented on each device. See the chapter on signal multiplexing for the number of GPIO ports available in the device.

32.1.3.1 Detailed signal description

Table 32-3. GPIO interface-detailed signal descriptions

Signal	I/O	Description	
PORTA31–PORTA0 PORTB31–PORTB0	I/O	General-purpose input/output	
		State meaning	Asserted: The pin is logic 1. Deasserted: The pin is logic 0.
		Timing	Assertion: When output, this signal occurs on the rising-edge of the system clock. For input, it may occur at any time and input may be asserted asynchronously to the system clock. Deassertion: When output, this signal occurs on the rising-edge of the system

Table 32-3. GPIO interface-detailed signal descriptions

Signal	I/O	Description
		clock. For input, it may occur at any time and input may be asserted asynchronously to the system clock.

32.2 Memory map and register definition

Any read or write access to the GPIO memory space that is outside the valid memory map results in a bus error.

GPIO memory map

Absolute address (hex)	Register name	Width (in bits)	Access	Reset value	Section/ page
400F_F000	Port Data Output Register (GPIOA_PDOR)	32	R/W	0000_0000h	32.2.1/526
400F_F004	Port Set Output Register (GPIOA_PSOR)	32	W (always reads 0)	0000_0000h	32.2.2/526
400F_F008	Port Clear Output Register (GPIOA_PCOR)	32	W (always reads 0)	0000_0000h	32.2.3/527
400F_F00C	Port Toggle Output Register (GPIOA_PTOR)	32	W (always reads 0)	0000_0000h	32.2.4/527
400F_F010	Port Data Input Register (GPIOA_PDIR)	32	R	0000_0000h	32.2.5/528
400F_F014	Port Data Direction Register (GPIOA_PDDR)	32	R/W	0000_0000h	32.2.6/528
400F_F040	Port Data Output Register (GPIOB_PDOR)	32	R/W	0000_0000h	32.2.1/526
400F_F044	Port Set Output Register (GPIOB_PSOR)	32	W (always reads 0)	0000_0000h	32.2.2/526
400F_F048	Port Clear Output Register (GPIOB_PCOR)	32	W (always reads 0)	0000_0000h	32.2.3/527
400F_F04C	Port Toggle Output Register (GPIOB_PTOR)	32	W (always reads 0)	0000_0000h	32.2.4/527
400F_F050	Port Data Input Register (GPIOB_PDIR)	32	R	0000_0000h	32.2.5/528
400F_F054	Port Data Direction Register (GPIOB_PDDR)	32	R/W	0000_0000h	32.2.6/528

32.2.1 Port Data Output Register (GPIOx_PDOR)

This register configures the logic levels that are driven on each general-purpose output pins.

NOTE

Do not modify pin configuration registers associated with pins not available in your selected package. All un-bonded pins not available in your package will default to DISABLE state for lowest power consumption.

Address: Base address + 0h offset

Bit	31	30	29	28	27	26	25	24	23	22	21	20	19	18	17	16	15	14	13	12	11	10	9	8	7	6	5	4	3	2	1	0
R W	PDO																															
Reset	0	0	0	0	0	0	0	0	0	0	0	0	0	0	0	0	0	0	0	0	0	0	0	0	0	0	0	0	0	0	0	0

GPIOx_PDOR field descriptions

Field	Description
PDO	Port Data Output Register bits for un-bonded pins return a undefined value when read. 0 Logic level 0 is driven on pin, provided pin is configured for general-purpose output. 1 Logic level 1 is driven on pin, provided pin is configured for general-purpose output.

32.2.2 Port Set Output Register (GPIOx_PSOR)

This register configures whether to set the fields of the PDOR.

Address: Base address + 4h offset

Bit	31	30	29	28	27	26	25	24	23	22	21	20	19	18	17	16	15	14	13	12	11	10	9	8	7	6	5	4	3	2	1	0
R	0																															
W	PTSO																															
Reset	0	0	0	0	0	0	0	0	0	0	0	0	0	0	0	0	0	0	0	0	0	0	0	0	0	0	0	0	0	0	0	0

GPIOx_PSOR field descriptions

Field	Description
PTSO	Port Set Output Writing to this register will update the contents of the corresponding bit in the PDOR as follows: 0 Corresponding bit in PDORn does not change. 1 Corresponding bit in PDORn is set to logic 1.

32.2.3 Port Clear Output Register (GPIOx_PCOR)

This register configures whether to clear the fields of PDOR.

Address: Base address + 8h offset

Bit	31	30	29	28	27	26	25	24	23	22	21	20	19	18	17	16	15	14	13	12	11	10	9	8	7	6	5	4	3	2	1	0
R	0																															
W	PTCO																															
Reset	0	0	0	0	0	0	0	0	0	0	0	0	0	0	0	0	0	0	0	0	0	0	0	0	0	0	0	0	0	0	0	0

GPIOx_PCOR field descriptions

Field	Description
PTCO	Port Clear Output Writing to this register will update the contents of the corresponding bit in the Port Data Output Register (PDOR) as follows: 0 Corresponding bit in PDORn does not change. 1 Corresponding bit in PDORn is cleared to logic 0.

32.2.4 Port Toggle Output Register (GPIOx_PTOR)

Address: Base address + Ch offset

Bit	31	30	29	28	27	26	25	24	23	22	21	20	19	18	17	16	15	14	13	12	11	10	9	8	7	6	5	4	3	2	1	0
R	0																															
W	PTTO																															
Reset	0	0	0	0	0	0	0	0	0	0	0	0	0	0	0	0	0	0	0	0	0	0	0	0	0	0	0	0	0	0	0	0

GPIOx_PTOR field descriptions

Field	Description
PTTO	Port Toggle Output Writing to this register will update the contents of the corresponding bit in the PDOR as follows: 0 Corresponding bit in PDORn does not change. 1 Corresponding bit in PDORn is set to the inverse of its existing logic state.

32.2.5 Port Data Input Register (GPIOx_PDIR)

NOTE

Do not modify pin configuration registers associated with pins not available in your selected package. All un-bonded pins not available in your package will default to DISABLE state for lowest power consumption.

Address: Base address + 10h offset

Bit	31	30	29	28	27	26	25	24	23	22	21	20	19	18	17	16	15	14	13	12	11	10	9	8	7	6	5	4	3	2	1	0
R	PDI																															
W																																
Reset	0	0	0	0	0	0	0	0	0	0	0	0	0	0	0	0	0	0	0	0	0	0	0	0	0	0	0	0	0	0	0	0

GPIOx_PDIR field descriptions

Field	Description
PDI	Port Data Input Reads 0 at the unimplemented pins for a particular device. Pins that are not configured for a digital function read 0. If the Port Control and Interrupt module is disabled, then the corresponding bit in PDIR does not update. 0 Pin logic level is logic 0, or is not configured for use by digital function. 1 Pin logic level is logic 1.

32.2.6 Port Data Direction Register (GPIOx_PDDR)

The PDDR configures the individual port pins for input or output.

Address: Base address + 14h offset

Bit	31	30	29	28	27	26	25	24	23	22	21	20	19	18	17	16	15	14	13	12	11	10	9	8	7	6	5	4	3	2	1	0
R W	PDD																															
Reset	0	0	0	0	0	0	0	0	0	0	0	0	0	0	0	0	0	0	0	0	0	0	0	0	0	0	0	0	0	0	0	0

GPIOx_PDDR field descriptions

Field	Description
PDD	Port Data Direction Configures individual port pins for input or output. 0 Pin is configured as general-purpose input, for the GPIO function. 1 Pin is configured as general-purpose output, for the GPIO function.

GPIOx_PDDR field descriptions (continued)

Field	Description

32.3 FGPIO memory map and register definition

The GPIO registers are also aliased to the IOPORT interface on the Cortex-M0+ from address 0xF800_0000. Accesses via the IOPORT interface occur in parallel with any instruction fetches and will therefore complete in a single cycle. This aliased Fast GPIO memory map is called FGPIO.

Any read or write access to the FGPIO memory space that is outside the valid memory map results in a bus error. All register accesses complete with zero wait states, except error accesses which complete with one wait state.

FGPIO memory map

Absolute address (hex)	Register name	Width (in bits)	Access	Reset value	Section/ page
F800_0000	Port Data Output Register (FGPIOA_PDOR)	32	R/W	0000_0000h	32.3.1/530
F800_0004	Port Set Output Register (FGPIOA_PSOR)	32	W (always reads 0)	0000_0000h	32.3.2/530
F800_0008	Port Clear Output Register (FGPIOA_PCOR)	32	W (always reads 0)	0000_0000h	32.3.3/531
F800_000C	Port Toggle Output Register (FGPIOA_PTOR)	32	W (always reads 0)	0000_0000h	32.3.4/531
F800_0010	Port Data Input Register (FGPIOA_PDIR)	32	R	0000_0000h	32.3.5/532
F800_0014	Port Data Direction Register (FGPIOA_PDDR)	32	R/W	0000_0000h	32.3.6/532
F800_0040	Port Data Output Register (FGPIOB_PDOR)	32	R/W	0000_0000h	32.3.1/530
F800_0044	Port Set Output Register (FGPIOB_PSOR)	32	W (always reads 0)	0000_0000h	32.3.2/530
F800_0048	Port Clear Output Register (FGPIOB_PCOR)	32	W (always reads 0)	0000_0000h	32.3.3/531
F800_004C	Port Toggle Output Register (FGPIOB_PTOR)	32	W (always reads 0)	0000_0000h	32.3.4/531
F800_0050	Port Data Input Register (FGPIOB_PDIR)	32	R	0000_0000h	32.3.5/532
F800_0054	Port Data Direction Register (FGPIOB_PDDR)	32	R/W	0000_0000h	32.3.6/532

32.3.1 Port Data Output Register (FGPIOx_PDOR)

This register configures the logic levels that are driven on each general-purpose output pins.

Address: Base address + 0h offset

Bit	31	30	29	28	27	26	25	24	23	22	21	20	19	18	17	16	15	14	13	12	11	10	9	8	7	6	5	4	3	2	1	0
R W	PDO																															
Reset	0	0	0	0	0	0	0	0	0	0	0	0	0	0	0	0	0	0	0	0	0	0	0	0	0	0	0	0	0	0	0	0

FGPIOx_PDOR field descriptions

Field	Description
PDO	Port Data Output Unimplemented pins for a particular device read as zero. 0 Logic level 0 is driven on pin, provided pin is configured for general-purpose output. 1 Logic level 1 is driven on pin, provided pin is configured for general-purpose output.

32.3.2 Port Set Output Register (FGPIOx_PSOR)

This register configures whether to set the fields of the PDOR.

Address: Base address + 4h offset

Bit	31	30	29	28	27	26	25	24	23	22	21	20	19	18	17	16	15	14	13	12	11	10	9	8	7	6	5	4	3	2	1	0
R	0																															
W	PTSO																															
Reset	0	0	0	0	0	0	0	0	0	0	0	0	0	0	0	0	0	0	0	0	0	0	0	0	0	0	0	0	0	0	0	0

FGPIOx_PSOR field descriptions

Field	Description
PTSO	Port Set Output Writing to this register will update the contents of the corresponding bit in the PDOR as follows: 0 Corresponding bit in PDORn does not change. 1 Corresponding bit in PDORn is set to logic 1.

32.3.3 Port Clear Output Register (FGPIOx_PCOR)

This register configures whether to clear the fields of PDOR.

Address: Base address + 8h offset

Bit	31	30	29	28	27	26	25	24	23	22	21	20	19	18	17	16	15	14	13	12	11	10	9	8	7	6	5	4	3	2	1	0
R	0																															
W	PTCO																															
Reset	0	0	0	0	0	0	0	0	0	0	0	0	0	0	0	0	0	0	0	0	0	0	0	0	0	0	0	0	0	0	0	0

FGPIOx_PCOR field descriptions

Field	Description
PTCO	Port Clear Output Writing to this register will update the contents of the corresponding bit in the Port Data Output Register (PDOR) as follows: 0 Corresponding bit in PDORn does not change. 1 Corresponding bit in PDORn is cleared to logic 0.

32.3.4 Port Toggle Output Register (FGPIOx_PTOR)

Address: Base address + Ch offset

Bit	31	30	29	28	27	26	25	24	23	22	21	20	19	18	17	16	15	14	13	12	11	10	9	8	7	6	5	4	3	2	1	0
R	0																															
W	PTTO																															
Reset	0	0	0	0	0	0	0	0	0	0	0	0	0	0	0	0	0	0	0	0	0	0	0	0	0	0	0	0	0	0	0	0

FGPIOx_PTOR field descriptions

Field	Description
PTTO	Port Toggle Output Writing to this register will update the contents of the corresponding bit in the PDOR as follows: 0 Corresponding bit in PDORn does not change. 1 Corresponding bit in PDORn is set to the inverse of its existing logic state.

32.3.5 Port Data Input Register (FGPIOx_PDIR)

Address: Base address + 10h offset

Bit	31	30	29	28	27	26	25	24	23	22	21	20	19	18	17	16	15	14	13	12	11	10	9	8	7	6	5	4	3	2	1	0
R	PDI																															
W																																
Reset	0	0	0	0	0	0	0	0	0	0	0	0	0	0	0	0	0	0	0	0	0	0	0	0	0	0	0	0	0	0	0	0

FGPIOx_PDIR field descriptions

Field	Description
PDI	Port Data Input Reads 0 at the unimplemented pins for a particular device. Pins that are not configured for a digital function read 0. If the Port Control and Interrupt module is disabled, then the corresponding bit in PDIR does not update. 0 Pin logic level is logic 0, or is not configured for use by digital function. 1 Pin logic level is logic 1.

32.3.6 Port Data Direction Register (FGPIOx_PDDR)

The PDDR configures the individual port pins for input or output.

Address: Base address + 14h offset

Bit	31	30	29	28	27	26	25	24	23	22	21	20	19	18	17	16	15	14	13	12	11	10	9	8	7	6	5	4	3	2	1	0
R W	PDD																															
Reset	0	0	0	0	0	0	0	0	0	0	0	0	0	0	0	0	0	0	0	0	0	0	0	0	0	0	0	0	0	0	0	0

FGPIOx_PDDR field descriptions

Field	Description
PDD	Port Data Direction Configures individual port pins for input or output. 0 Pin is configured as general-purpose input, for the GPIO function. 1 Pin is configured as general-purpose output, for the GPIO function.

32.4 Functional description

32.4.1 General-purpose input

The logic state of each pin is available via the Port Data Input registers, provided the pin is configured for a digital function and the corresponding Port Control and Interrupt module is enabled.

32.4.2 General-purpose output

The logic state of each pin can be controlled via the port data output registers and port data direction registers, provided the pin is configured for the GPIO function. The following table depicts the conditions for a pin to be configured as input/output.

If	Then
A pin is configured for the GPIO function and the corresponding port data direction register bit is clear.	The pin is configured as an input.
A pin is configured for the GPIO function and the corresponding port data direction register bit is set.	The pin is configured as an output and and the logic state of the pin is equal to the corresponding port data output register.

To facilitate efficient bit manipulation on the general-purpose outputs, pin data set, pin data clear, and pin data toggle registers exist to allow one or more outputs within one port to be set, cleared, or toggled from a single register write.

The corresponding Port Control and Interrupt module does not need to be enabled to update the state of the port data direction registers and port data output registers including the set/clear/toggle registers.

32.4.3 IOPORT

The GPIO registers are also aliased to the IOPORT interface on the Cortex-M0+ from address 0xF800_0000. Accesses via the IOPORT interface occur in parallel with any instruction fetches and will therefore complete in a single cycle.

During Compute Operation, the GPIO registers remain accessible via the IOPORT interface only. Since the clocks to the Port Control and Interrupt modules are disabled during Compute Operation, the Pin Data Input Registers do not update with the current state of the pins.

Appendix A
Revision history of this document

A.1 Changes between revisions 3.1 and 3

Table A-1. Changes between revisions 3.1 and 3

Chapter	Description
Throughout the whole reference manual	• Removed the low-leakage wakeup unit, KL02 does not support it.
Chip Configuration	• Added a note to the Interrupt vector assignments table to specify that the NVIC wake-up sources support only down to VLPS.
Multipurpose Clock Generator (MCG)	• Removed PLL feature. • Removed 4 MHz external clock involved information, KL02 does not support it.

A.2 Changes between revisions 3 and 2

Table A-2. Changes between revisions 3 and 2

Chapter	Description
Throughout the whole reference manual	• Removed the DMA involved registers and information, KL02 does not support DMA.

How to Reach Us:

Home Page:
freescale.com

Web Support:
freescale.com/support

Information in this document is provided solely to enable system and software implementers to use Freescale products. There are no express or implied copyright licenses granted hereunder to design or fabricate any integrated circuits based on the information in this document. Freescale reserves the right to make changes without further notice to any products herein.

Freescale makes no warranty, representation, or guarantee regarding the suitability of its products for any particular purpose, nor does Freescale assume any liability arising out of the application or use of any product or circuit, and specifically disclaims any and all liability, including without limitation consequential or incidental damages. “Typical” parameters that may be provided in Freescale data sheets and/or specifications can and do vary in different applications, and actual performance may vary over time. All operating parameters, including “typicals,” must be validated for each customer application by customer's technical experts. Freescale does not convey any license under its patent rights nor the rights of others. Freescale sells products pursuant to standard terms and conditions of sale, which can be found at the following address: freescale.com/SalesTermsandConditions.

Freescale, the Freescale logo, Energy Efficient Solutions logo, and Kinetis are trademarks of Freescale Semiconductor, Inc., Reg. U.S. Pat. & Tm. Off. All other product or service names are the property of their respective owners. ARM and Cortex-M0+ are the registered trademarks of ARM Limited.

©2012-2013 Freescale Semiconductor, Inc.

Document Number KL02P32M48SF0RM
Revision 3.1, July 2013